SECURITY

COUNTERINTELLIGENCE

OFFICE OF THE NATIONAL COUNTERINTELLIGENCE EXECUTIVE

TECHNICAL SPECIFICATIONS FOR CONSTRUCTION AND MANAGEMENT OF SENSITIVE COMPARTMENTED INFORMATION FACILITIES

VERSION 1.1

IC Tech Spec-for ICD/ICS 705

An Intelligence Community Technical Specification
Prepared by the
Office of the National Counterintelligence Executive
Principal Deputy for Security

October 31, 2011

Table of Contents

Chapter 1. Introduction 1
A. Purpose 1
B. Applicability 1
Chapter 2. Risk Management 2
A. Analytical Risk Management Process 2
B. Security in Depth (SID) 3
C. Compartmented Area (CA) 5
Chapter 3. Fixed Facility SCIF Construction 7
A. Personnel 7
B. Construction Security 8
C. Perimeter Wall Construction Criteria 9
D. Floor and Ceiling Construction Criteria 12
E. SCIF Door Criteria 12
F. SCIF Window Criteria 13
G. SCIF Perimeter Penetrations Criteria 14
H. Alarm Response Time Criteria for SCIFs within the U.S. 15
I. Secure Working Areas (SWA) 15
J. Temporary Secure Working Area (TSWA) 15
Chapter 4. SCIFs Outside the U.S. and NOT Under Chief of Mission (COM) Authority 21
A. General 21
B. Establishing Construction Criteria Using Threat Ratings 21
C. Personnel 24
D. Construction Security Requirements 25
E. Procurement of Construction Materials 28
F. Secure Transportation for Construction Material 31
G. Secure Storage of Construction Material 32
H. Technical Security 32
I. Interim Accreditations 32

Chapter 5. SCIFs Outside the U.S. and Under Chief of Mission Authority 33
A. Applicability 33
B. General Guidelines 33
C. Threat Categories 34
D. Construction Requirements 35
E. Personnel 36
F. Construction Security Requirements 38
G. Procurement of Construction Materials 40
H. Secure Transportation for Construction Material 42
I. Secure Storage of Construction Material 43
J. Technical Security 43
K. Interim Accreditations 43
Chapter 6. Temporary, Airborne, and Shipboard SCIFs 44
A. Applicability 44
B. Ground-Based T-SCIFs 44
C. Permanent and Tactical SCIFS Aboard Aircraft 46
D. Permanent and Tactical SCIFs on Surface or Subsurface Vessels 48
Chapter 7. Intrusion Detection Systems (IDS) 54
A. Specifications and Implementation Requirements 54
B. IDS Modes of Operation 58
C. Operations and Maintenance of IDS 60
D. Installation and Testing of IDS 61
Chapter 8. Access Control Systems (ACS) 63
A. SCIF Access Control 63
B. ACS Administration 64
C. ACS Physical Protection 64
D. ACS Recordkeeping 64
E. Using Closed Circuit Television (CCTV) to Supplement ACS 65
F. Non-Automated Access Control 65

Chapter 9. Acoustic Protection 66
A. Overview 66
B. Sound Group Ratings 66
C. Acoustic Testing 66
D. Construction Guidance for Acoustic Protection 67
E. Sound Transmission Mitigations 67
Chapter 10. Portable Electronic Devices (PEDs) 69
A. Approved Use of PEDs in a SCIF 69
B. Prohibitions 70
C. PED Risk Levels 70
D. Risk Mitigation 71
Chapter 11. Telecommunications Systems 74
A. Applicability 74
B. Unclassified Telephone Systems 74
C. Unclassified Information Systems 75
D. Using Closed Circuit Television (CCTV) to Monitor the SCIF Entry Point(s) 76
E. Unclassified Wireless Network Technology 76
F. Environmental Infrastructure Systems 76
G. Emergency Notification Systems 77
H. Systems Access 77
I. Unclassified Cable Control 78
J. References 78
Chapter 12. Management and Operations 80
A. Purpose 80
B. SCIF Repository 80
C. SCIF Management 81
D. SOPs 82
E. Changes in Security and Accreditation 83
F. General 83

G. Inspections 84
H. Control of Combinations 84
I. De-Accreditation Guidelines 85
J. Visitor Access 85
K. Maintenance 87
L. IDS and ACS Documentation Requirements 87
M. Emergency Plan 88
Chapter 13. Forms and Plans 90
Fixed Facility Checklist 91
TEMPEST Checklist 111
Compartmented Area Checklist 121
Shipboard Checklist 129
Aircraft/UAV Checklist 143
SCIF Co-Use Request and MOA 153
Construction Security Plan (CSP) 155

Chapter 1. Introduction

A. Purpose

This Intelligence Community (IC) Technical Specification sets forth the physical and technical security specifications and best practices for meeting standards of Intelligence Community Standard (ICS) 705-1 (Physical and Technical Standards for Sensitive Compartmented Information Facilities). When the technical specifications herein are applied to new construction and renovations of Sensitive Compartmented Information Facilities (SCIFs), they shall satisfy the standards outlined in ICS 705-1 to enable uniform and reciprocal use across all IC elements and to assure information sharing to the greatest extent possible. This document is the implementing specification for Intelligence Community Directive (ICD) 705, Physical and Technical Security Standards for Sensitive Compartmented Information Facilities (ICS-705-1) and Standards for Accreditation and Reciprocal Use of Sensitive Compartmented Information Facilities (ICS-705-2) and supersedes Director of Central Intelligence Directive (DCID) 6/9.

The specifications contained herein will facilitate the protection of Sensitive Compartmented Information (SCI) against compromising emanations, inadvertent observation and disclosure by unauthorized persons, and the detection of unauthorized entry.

B. Applicability

IC Elements shall fully implement this standard within 180 days of its signature.

SCIFs that have been de-accredited but controlled at the SECRET level (IAW 32 Code of Federal Regulations (CFR) parts 2001 and 2004) for less than one year may be reaccredited one time using the previous standard. The IC SCIF repository shall indicate that the accreditation was based upon the previous standards.

Chapter 2. Risk Management

A. Analytical Risk Management Process

1. The Accrediting Official (AO) and the Site Security Manager (SSM) should evaluate each proposed SCIF for threats, vulnerabilities, and assets to determine the most efficient countermeasures required for physical and technical security. In some cases, based upon that risk assessment, it may be determined that it is more practical or efficient to mitigate a standard. In other cases, it may be determined that additional security measures should be employed due to a significant risk factor.

2. Security begins when the initial requirement for a SCIF is known. To ensure the integrity of the construction and final accreditation, security plans should be coordinated with the AO before construction plans are designed, materials ordered, or contracts let.

a) Security standards shall apply to all proposed SCI facilities and shall be coordinated with the AO for guidance and approval. Location of facility construction and or fabrication does not exclude a facility from security standards and or review and approval by the AO. SCI facilities include but are not limited to fixed facilities, mobile platforms, prefabricated structures, containers, modular applications or other new or emerging applications and technologies that may meet performance standards for use in SCI facility construction.

b) Mitigations are verifiable, non-standard methods that shall be approved by the AO to effectively meet the physical/technical security protection level(s) of the standard. While most standards may be effectively mitigated via non-standard construction, additional security countermeasures and/or procedures, some standards are based upon tested and verified equipment (e.g., a combination lock meeting Federal Specification FF-L 2740A) chosen because of special attributes and could not be mitigated with non-tested equipment. The AO's approval is documented to confirm that the mitigation is at least equal to the physical/technical security level of the standard.

c) Exceeding a standard, even when based upon risk, requires that a waiver be processed and approved in accordance with ICD 705.

3. The risk management process includes a critical evaluation of threats, vulnerability, and assets to determine the need and value of countermeasures. The process may include the following:

a) Threat Analysis. Assess the capabilities, intentions, and opportunity of an adversary to exploit or damage assets or information. Reference the threat information provided in the National Threat Identification and Prioritization Assessment (NTIPA) produced by the National Counterintelligence Executive (NCIX) for inside the U.S. and/or the Overseas Security Policy Board (OSPB), Security Environment Threat List (SETL) for outside the U.S. to determine technical threat to a location. When evaluating for TEMPEST, the Certified

TEMPEST Technical Authorities (CTTA) shall use the National Security Agency Information Assurance (NSA IA) list as an additional resource for specific technical threat information. It is critical to identify other occupants of common and adjacent buildings. (However, do not attempt to collect information against U.S. persons in violation of Executive Order (EO) 12333.) In areas where there is a diplomatic presence of high and critical threat countries, additional countermeasures may be necessary.

b) Vulnerability Analysis. Assess the inherent susceptibility to attack of a procedure, facility, information system, equipment, or policy.

c) Probability Analysis. Assess the probability of an adverse action, incident, or attack occurring.

d) Consequence Analysis. Assess the consequences of such an action (expressed as a measure of loss, such as cost in dollars, resources, programmatic effect/mission impact, etc.).

B. Security in Depth (SID)

1. SID describes the factors that enhance the probability of detection before actual penetration to the SCIF occurs. The existence of a layer or layers of security that offer mitigations for risks may be accepted by the AO. An important factor in determining risk is whether layers of security already exist at the facility. If applied, these layers may, with AO approval, alter construction requirements and extend security alarm response time to the maximum of 15 minutes. Complete documentation of any/all SID measures in place will assist in making risk decisions necessary to render a final standards decision.

2. SID is mandatory for SCIFs located outside the U.S. due to increased threat.

3. The primary means to achieve SID are listed below and are acceptable. SID requires that at least one of the following mitigations is applied:

a) Military installations, embassy compounds, U.S. Government (USG) compounds, or contractor compounds with a dedicated response force of U.S. persons.

b) Controlled buildings with separate building access controls, alarms, elevator controls, stairwell controls, etc., required to gain access to the buildings or elevators. These controls shall be fully coordinated with a formal agreement or managed by the entity that owns the SCIF.

c) Controlled office areas adjacent to or surrounding SCIFs that are protected by alarm equipment installed in accordance with manufacturer's instructions. These controls shall be fully coordinated with a formal agreement or managed by the entity that owns the SCIF.

d) Fenced compounds with access controlled vehicle gate and/or pedestrian gate.

e) The AO may develop additional strategies to mitigate risk and increase probability of detection of unauthorized entry.

C. Compartmented Area (CA)

1. Definition

A CA is an area, room, or a set of rooms within a SCIF that provides controlled separation between control systems, compartments, sub-compartments, or Controlled Access Programs.

2. Requirements

a) A CA may be required when SCIF personnel are not briefed to all of the respective programs.

b) Personnel with access to CAs should be indoctrinated to the SCI compartment(s) of the parent SCIF in addition to the compartment(s) required for the CA.

c) Any construction or security requirements above those listed herein require prior approval from the element head as described in ICS 705-2.

3. Access Control

a) Access control to the CA may be accomplished by visual recognition or mechanical/electronic access control devices.

b) Spin-dial combination locks shall not be installed on CA doors.

c) Independent alarm systems shall not be installed in a CA.

4. Visual Protection of CA Workstations

If compartmented information will be displayed on a computer terminal or group of terminals in an area where everyone is not accessed to the program, the following measures may be applied to reduce the ability of "shoulder surfing" or inadvertent viewing of compartmented information:

- Position the computer screen away from doorway/cubicle opening.
- Use a polarizing privacy screen.
- Use partitions and/or signs.
- Existing private offices or rooms may be used but may not be a mandatory requirement.

5. Closed Storage

When the storage, processing, and use of compartmented information, product, or deliverables is required, and all information shall be stored while not in use, then all of the following shall apply:

a) Access and visual controls identified above shall be the standard safeguard.

b) Compartmented information shall be physically stored in a General Services Administration (GSA) approved safe.

6. Open Storage

In rare instances when open storage of information is required, the following apply:

a) If the parent SCIF is accredited for open storage, a private office with access control on the door is adequate physical security protection.

b) If the parent SCIF has been built and accredited for closed storage, then the CA perimeter shall be constructed and accredited to open storage standards.

c) The CA AO may approve open or closed storage within the CA. Storage requirements shall be noted in both the CA Fixed Facility Checklist (FFC) and, if appropriate, in a Memorandum of Understanding (MOU).

7. Acoustic and Technical Security

a) All TEMPEST, administrative telephone, and technical surveillance countermeasure (TSCM) requirements for the parent SCIF shall apply to the CA and shall be reciprocally accepted.

b) When compartmented discussions are required, the following apply:

(1) Use existing rooms that have been accredited for SCI discussions.

(2) Use administrative procedures to restrict access to the room during conversations.

Chapter 3. Fixed Facility SCIF Construction

Requirements outlined within this chapter apply to all fixed facility SCIFs. Additional information and requirements for facilities located outside the U.S., its possessions or territories, are found in Chapters 4 and 5. Additional information and requirements for temporary SCIFs are described in Chapter 6.

A. Personnel

Roles and responsibilities of key SCIF construction personnel are identified in ICS 705-1 and restated here for reference.

1. AO Responsibilities

   a) Provide security oversight of all aspects of SCIF construction under their security purview.

   b) Review and approve the design concept, Construction Security Plan (CSP), and final design for each construction project prior to the start of SCIF construction.

   c) Depending on the magnitude of the project, shall determine if the Site Security Manager (SSM) performs duties on a full-time, principal basis, or as an additional duty to on-site personnel.

   d) Accredit SCIFs under their cognizance.

   e) Prepare waiver requests for the IC element head or designee.

   f) Provide the timely input of all required SCIF data to the IC SCIF repository.

   g) Consider SID on USG or USG-sponsored contractor facilities to substitute for standards herein. (SID shall be documented in the CSP and the FFC.)

2. Site Security Managers (SSMs) Responsibilities

   a) Ensure the requirements herein are implemented and advise the AO of compliance or variances.

   b) In consultation with the AO, develop a CSP regarding implementation of the standards herein. (This document shall include actions required to document the project from start to finish.)

   c) Conduct periodic security inspections for the duration of the project to ensure compliance with the CSP.

   d) Document security violations or deviations from the CSP and notify the AO within 3 business days.

   e) Ensure that procedures to control site access are implemented.

3. CTTA Responsibilities

a) Review SCIF construction or renovation plans to determine if TEMPEST countermeasures are required and recommend solutions. (To the maximum extent practicable, TEMPEST mitigation requirements shall be incorporated into the SCIF design.)

b) Provide the Cognizant Security Authority (CSA)AO with documented results of review with recommendations.

4. Construction Surveillance Technicians (CSTs) Responsibilities

Supplement site access controls, implement screening and inspection procedures, as well as monitor construction and personnel, when required by the AO

B. Construction Security

1. Prior to awarding a construction contract, a CSP for each project shall be developed by the SSM and approved by the AO.

2. Construction plans and all related documents shall be handled and protected in accordance with the CSP.

3. For SCIF renovation projects, barriers shall be installed to segregate construction workers from operational activities and provide protection against unauthorized access and visual observation. Specific guidance shall be contained in the CSP.

4. Periodic security inspections shall be conducted by the SSM or designee for the duration of the project to ensure compliance with construction design and security standards.

5. Construction and design of SCIFs should be performed by U.S. companies using U.S. citizens to reduce risk, but may be performed by U.S. companies using U.S. persons (an individual who has been lawfully admitted for permanent residence as defined in 8 U.S.C. 1 101(a)(20) or who is a protected individual as defined by Title 8 U.S.C. 1 324b (a)(3)). The AO shall ensure mitigations are implemented when using non-U.S. citizens. These mitigations shall be documented in the CSP.

6. All site control measures used shall be documented in the CSP. Among the control measures that may be considered are the following:

- Identity verification.
- Random searches at site entry and exit points.
- Signs at all entry points listing prohibited and restricted items (e.g., cameras, firearms, explosives, drugs, etc.).
- Physical security barriers to deny unauthorized access.
- Vehicle inspections.

C. Perimeter Wall Construction Criteria

1. General

a) SCIF perimeters include all walls that outline the SCIF confines, floors, ceilings, doors, windows and penetrations by ductwork, pipes, and conduit. This section describes recommended methods to meet the standards described within ICS 705-1 for SCIF perimeters.

b) Perimeter wall construction specifications vary by the type of SCIF, location, use of SID, and discussion requirements.

c) Closed storage areas that do not require discussion areas do not have any forced entry or acoustic requirements.

d) Open storage facilities without SID require additional protection against forced and surreptitious entry.

e) When an existing wall is constructed with substantial material (e.g., brick, concrete, cinderblock, etc.) equal to meet the perimeter wall construction standards, the existing wall may be utilized to satisfy the specification.

2. Closed Storage, Secure Working Area (SWA), Continuous Operation, or Open Storage with SID - Use Wall A - Recommended Standard Acoustic Wall (see construction drawing for details).

a) Three layers of ⅝ inch-thick type “X” gypsum board, one layer on the outside of the SCIF and two on the inside of the SCIF provide adequate rigidity and acoustic protection (Sound Class 3).

b) Gypsum board shall be attached to 3 ⅝ inch-wide metal studs or wooden 2 x 4 studs placed a maximum of 24 inches on center.

c) Continuous runners (same gauge as studs) for securing studs shall be anchored to the true floor and true ceiling structures.

d) The interior two layers of gypsum board shall be mounted so that the seams do not align (i.e., stagger joints).

e) Acoustic fill shall be placed between the studs in a manner which prevents slippage.

f) The top and bottom of each wall shall be sealed with an acoustic sealant where it meets the slab.

g) Wall penetrations shall be treated and sealed with acoustic material.

h) Entire wall assembly shall be finished and painted from true floor to true ceiling.

3. Open Storage without SID -- Use Wall B - Enhanced Wall Using Expanded Metal or Wall C - Enhanced Wall Using Plywood.

a) Three layers of ⅝ inch-thick type "X" gypsum board, one layer on the outside of the SCIF and two on the inside of the SCIF provide adequate rigidity and acoustic protection (Sound Class 3).

b) Metal studs shall be 3 ⅝ inch-wide, 16 gauge metal, mounted a maximum of 16 inches on center.

c) Wooden studs will be 2 x 4 studs mounted a maximum of 16 inches on center.

d) Wall B - Enhanced Wall Using Expanded Metal (see drawing for Wall B-Enhanced Construction using Expanded Metal).

(1) Three-quarter inch mesh, # 9 (10 gauge) expanded metal shall be affixed to the interior side of all SCIF perimeter wall studs.

(2) Expanded metal shall be spot-welded to the studs every six inches along the length of each vertical stud and at the ceiling and floor.

(3) Hardened screws with one inch washers or hardened clips may be used in lieu of welding to fasten metal to the studs. Screws shall be applied every six inches along the length of each vertical stud and at the ceiling and floor.

(4) Fastening method shall be noted in the FFC.

e) Wall C - Enhanced Wall Using Plywood (see drawing for Wall C-Enhanced Construction using Plywood).

(1) Two layers of ⅝ inch-thick type "X" gypsum board, one layer on the outside of the SCIF and one on the inside of the SCIF. A plywood layer shall substitute one layer of gypsum board on the inside wall as compared to the standard acoustic wall.

(2) Gypsum board shall be attached to 3 ⅝ inch-wide metal studs or wooden 2 x 4 studs placed a maximum of 24 inches on center.

(3) One layer of ⅝ inch-thick plywood shall be attached vertically, directly to the wall studs.

(4) The plywood shall be continuously glued and screwed to the studs every 12 inches along the length of each stud.

4. Radio Frequency (RF) Protection for Perimeter Walls

a) RF protection shall be installed at the direction of the CTTA when a SCIF utilizes electronic processing and does not provide adequate RF attenuation at the inspectable space boundary. It is recommended for all applications where RF interference from the outside of the SCIF is a concern inside the SCIF.

b) Installation of RF protection should be done using either the drawings or *Best Practices Guidelines for Architectural Radio Frequency Shielding*, prepared by the Technical Requirements Steering Committee under the Center for Security

Evaluation. This document is available through the Center for Security Evaluation, Office of the Director of National Intelligence (ONCIX/CSE).

5. Vault Construction Criteria

GSA-approved modular vaults meeting Federal Specification AA-V-2737 or one of the following construction methods may be used:

a) Reinforced Concrete Construction

(1) Walls, floor, and ceiling will be a minimum thickness of eight inches of reinforced concrete.

(2) The concrete mixture will have a comprehensive strength rating of at least 2,500 pounds per square inch (psi).

(3) Reinforcing will be accomplished with steel reinforcing rods, a minimum of ⅝ inches in diameter, positioned centralized in the concrete pour and spaced horizontally and vertically six inches on center; rods will be tied or welded at the intersections.

(4) The reinforcing is to be anchored into the ceiling and floor to a minimum depth of one-half the thickness of the adjoining member.

b) Steel-Lined Construction Where Unique Structural Circumstances Do Not Permit Construction of a Concrete Vault

(1) Construction will use ¼ inch-thick steel alloy-type plates having characteristics of high-yield and high-tensile strength.

(2) The steel plates are to be continuously welded to load-bearing steel members of a thickness equal to that of the plates.

(3) If the load-bearing steel members are being placed in a continuous floor and ceiling of reinforced concrete, they must be firmly affixed to a depth of one-half the thickness of the floor and ceiling.

(4) If floor and/or ceiling construction is less than six inches of reinforced concrete, a steel liner is to be constructed the same as the walls to form the floor and ceiling of the vault. Seams where the steel plates meet horizontally and vertically are to be continuously welded together.

All vaults shall be equipped with a GSA-approved Class 5 vault door.

D. Floor and Ceiling Construction Criteria

1. Floors and ceilings shall be constructed to meet the same standards for force protection and acoustic protection as walls.

2. All floor and ceiling penetrations shall be kept to a minimum.

E. SCIF Door Criteria

1. There shall be only one primary SCIF entrance where visitor control is conducted.

   a) Primary entrance doors shall be equipped with the following:

      (1) A GSA-approved pedestrian door deadbolt meeting Federal Specification FF-L- 2890.

      (2) A combination lock meeting Federal Specification FF-L 2740A.

      (3) An approved access-control device (see Chapter 8).

      (4) May be equipped with a high security keyway for use in the event of an access control system failure.

   b) With AO approval, additional entrance doors may be designated for use by SCIF residents provided that the doors are equipped with an approved access control system and are secured with an approved dead bolt or lock when the SCIF is not occupied. The dead-bolt shall not be accessible from the exterior.

2. When practical, entrance doors should incorporate a vestibule to preclude visual observation and enhance acoustic protection.

3. All perimeter SCIF doors shall be equipped with an automatic, non-hold door-closer which shall be installed internal to the SCIF, if possible.

4. Emergency exit doors shall:

   - Be secured with deadlocking panic hardware on the inside.
   - Have no exterior hardware.
   - Be alarmed 24/7.
   - Provide a local audible annunciation when opened.

5. Hinge pins that are accessible from outside of the SCIF door shall be modified to prevent removal of the door, e.g., welded, set screws, etc.

6. SCIF doors and frame assemblies shall meet acoustic requirements as described in Chapter 9 unless declared a non-discussion area.

7. All perimeter doors shall be alarmed in accordance with Chapter 7.

8. Perimeter doors shall comply with applicable building, safety, and accessibility codes and requirements.

9. Perimeter doors shall meet TEMPEST requirements when applicable.

10. Wood doors shall be 1 ¾ inch-thick solid wood core (wood stave).

11. Steel doors shall meet following specifications:

- 1 ¾ inch-thick face steel equal to 18 gauge.
- Hinges reinforced to 7 gauge.
- Door closure reinforced to 12 gauge.
- Lock area predrilled and/or reinforced to 10 gauge.

12. A vault door shall not be used to control day access to a facility. To mitigate both security and safety concerns, a vestibule with an access control device may be constructed.

13. Roll-up Door Specifications

a) A roll-up door cannot be treated for acoustics and shall only be located in an area of the SCIF that is designated as a non-discussion area.

b) Roll-up doors shall be 18 gauge steel or greater and shall be secured inside the SCIF using dead-bolts on both the right and left side of the door.

14. Double Door Specifications

a) One of the doors shall be secured at the top and bottom with deadbolts.

b) An astragal strip shall be attached to one door (could be either the secured or the movable door depending on the inward/outward swing of door assembly) to prevent observation of the SCIF through the cracks between the doors.

c) Each door shall have an independent high-security switch.

F. SCIF Window Criteria

1. Every effort should be made to minimize or eliminate windows in the SCIF, especially on the ground floor.

2. Windows shall be non-opening.

3. Windows shall be protected by security alarms in accordance with Chapter 7 when they are within 18 feet of the ground or an accessible platform.

4. Windows shall provide visual and acoustic protection.

5. Windows shall be treated to provide RF protection when recommended by the CTTA.

6. All windows less than 18 feet above the ground or from the nearest platform affording access to the window (measured from the bottom of the window), shall be protected against forced entry and meet the standard for the perimeter.

G. SCIF Perimeter Penetrations Criteria

1. All penetrations of perimeter walls shall be kept to a minimum.

2. Metallic penetrations may require TEMPEST countermeasures, to include dielectric breaks or grounding, when recommended by the CTTA.

3. Utilities servicing areas other than the SCIF shall not transit the SCIF unless mitigated with AO approval.

4. Utilities should enter the SCIF at a single point.

5. All utility (power and signal) distribution on the interior of a perimeter wall treated for acoustics or RF shall be surface mounted, contained in a raceway, or an additional wall shall be constructed using furring strips as stand-off from the existing wall assembly. If the construction of an additional wall is used, gypsum board may be ⅜ inch-thick and need only go to the false ceiling.

6. Installation of additional conduit penetration for future utility expansion is permissible provided the expansion conduit is filled with acoustic fill and capped (end of pipe cover).

7. Vents and Ducts

a) All vents and ducts shall be protected to meet the acoustic requirements of the SCIF. (See Figure 4, Typical Air (Z) Duct Penetration, for example.)

b) Walls surrounding duct penetrations shall be finished to eliminate any opening between the duct and the wall.

c) All vents or duct openings that penetrate the perimeter walls of a SCIF and exceed 96 square inches shall be protected with permanently affixed bars or grills.

(1) If one dimension of the penetration measures less than six inches, bars or grills are not required.

(2) When metal sound baffles or wave forms are permanently installed and set no farther apart than six inches in one dimension, then bars or grills are not required.

(3) If bars are used, they shall be a minimum of ½ inch diameter steel, welded vertically and horizontally six inches on center; a deviation of ½ inch in vertical and/or horizontal spacing is permissible.

(4) If grills are used, they shall be of ¾ inch-mesh, #9 (10 gauge), case-hardened, expanded metal.

(5) If bars or grill are required, an access port shall be installed inside the secure perimeter of the SCIF to allow visual inspection of the bars or grill. If the area outside the SCIF is controlled (SECRET or equivalent proprietary space), the inspection port may be installed outside the perimeter of the SCIF and be secured with an AO-approved high-security lock. This shall be noted in the FFC.

H. Alarm Response Time Criteria for SCIFs within the U.S.

Response times for Intrusion Detection Systems (IDS) shall meet 32 CFR Parts 2001 and 2004.

a) Closed Storage response time of 15 minutes.

b) Open Storage response time within 15 minutes of the alarm annunciation if the area is covered by SID or a five minute alarm response time if it is not.

I. Secure Working Areas (SWA)

SWAs are accredited facilities used for discussing, handling, and/or processing SCI, but where SCI will not be stored.

1. The SWA shall be controlled at all times by SCI-indoctrinated individuals or secured with a GSA-approved combination lock.

2. The SCIF shall be alarmed in accordance with Chapter 7 with an initial alarm response time of 15 minutes.

3. Access control shall be in accordance with Chapter 8.

4. Perimeter construction shall comply with section 3.C. above.

5. All SCI used in an SWA shall be removed and stored in GSA-approved security containers within a SCIF, a vault, or be destroyed when the SWA is unoccupied.

J. Temporary Secure Working Area (TSWA)

TSWAs are accredited facilities where handling, discussing, and/or processing of SCI is limited to less than 40-hours per month and the accreditation is limited to 12 months or less. Extension requests require a plan to accredit as a SCIF or SWA. Storage of SCI is not permitted within a TSWA.

1. When a TSWA is in use at the SCI level, access shall be limited to SCI- indoctrinated persons.

2. The AO may require an alarm system.

3. No special construction is required.

4. When the TSWA is approved for SCI discussions, sound attenuation specifications of Chapter 9 shall be met.

5. The AO may require a TSCM evaluation if the facility has not been continuously controlled at the SECRET level.

6. When the TSWA is not in use at the SCI level, the following shall apply:

a) The TSWA shall be secured with a high-security, AO-approved key or combination lock.

b) Access shall be limited to personnel possessing a minimum U.S. SECRET clearance.

Figure 1

Wall A –Standard Acoustic Wall Construction

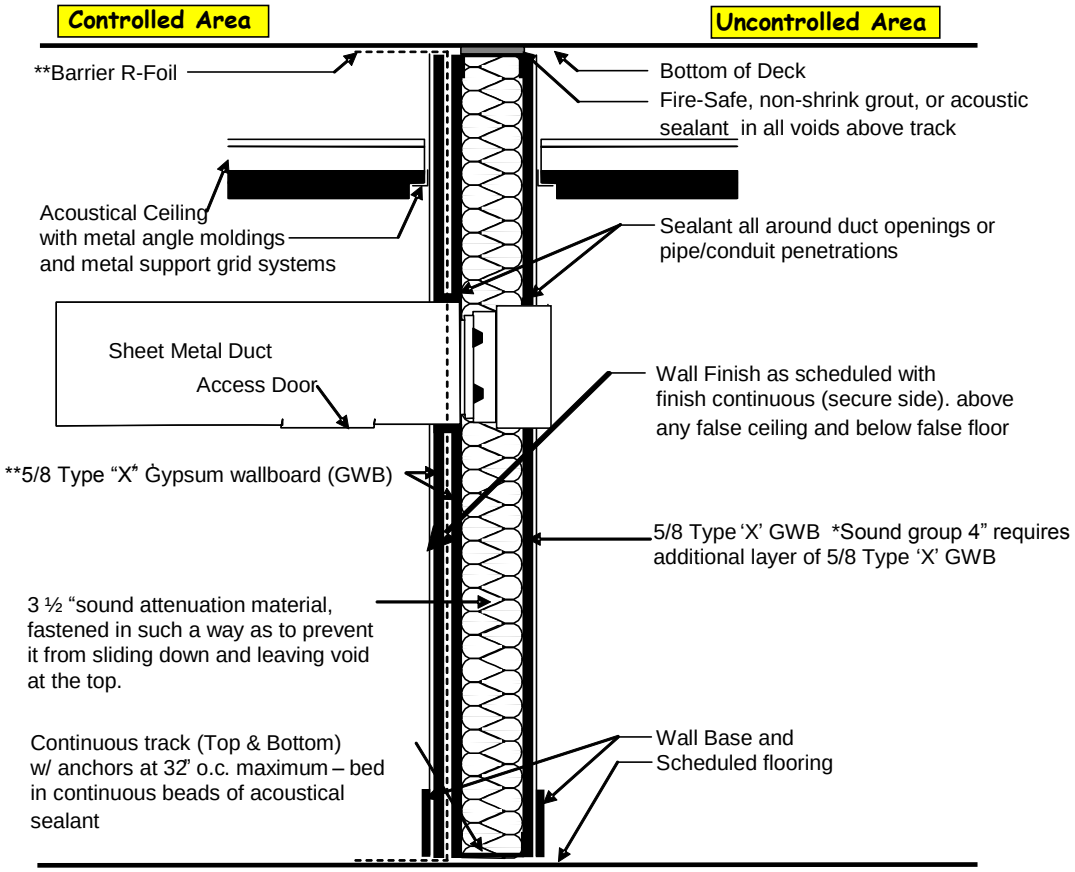

Conduit pipe penetrations should be sealed all around.
Duct penetrations should be sealed all around. Duct openings larger than 96 Square Inches (unless one dimension is 6" or less) shall be protected with ½" manbars spaced and welded at 6" OC. Ducts that have manbars require an access panel on the secure side.

*Sound Group 4 wall requires four layers of 5/8" GWB and special acoustic door or vestibule.

**When required by CTTA. Foil backed GWB or a layer of approved Ultra Radiant R-Foil may be used.

***Depending on height, true floor to true ceiling and weight, metal studs shall be in a range of 20 gauge to 16 gauge.

Partition shall be sealed continuously with acoustical sealant wherever it abuts another element (i.e., wall, column, mullion, etc.).

Any electrical or communications outlets required on the perimeter wall shall be surface mounted.

Figure 2

Wall B - Enhanced Construction Using Expanded Metal

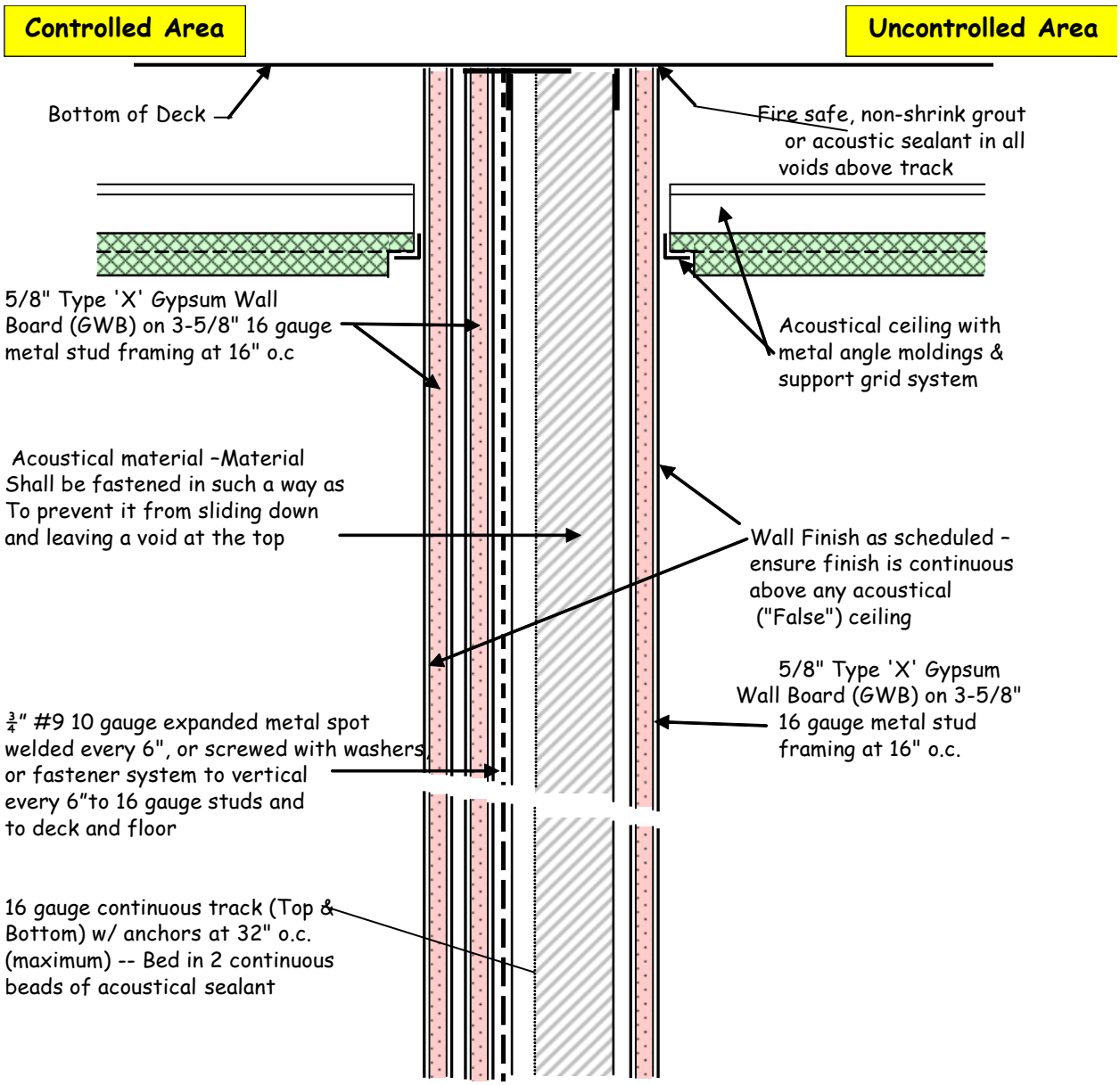

Notes:

1 This detail is intended for 'new construction' -- AO must approve any variations in expanded metal use.

2 CTTA recommended countermeasures (foil backed wallboard or R-foil shall be installed IAW *Best Practice Guidelines for Architectural Radio Frequency Shielding*.)

3 Any electrical or communications outlets required on walls shall be surface mounted.

Figure 3

Wall C - Enhanced Construction Using Plywood

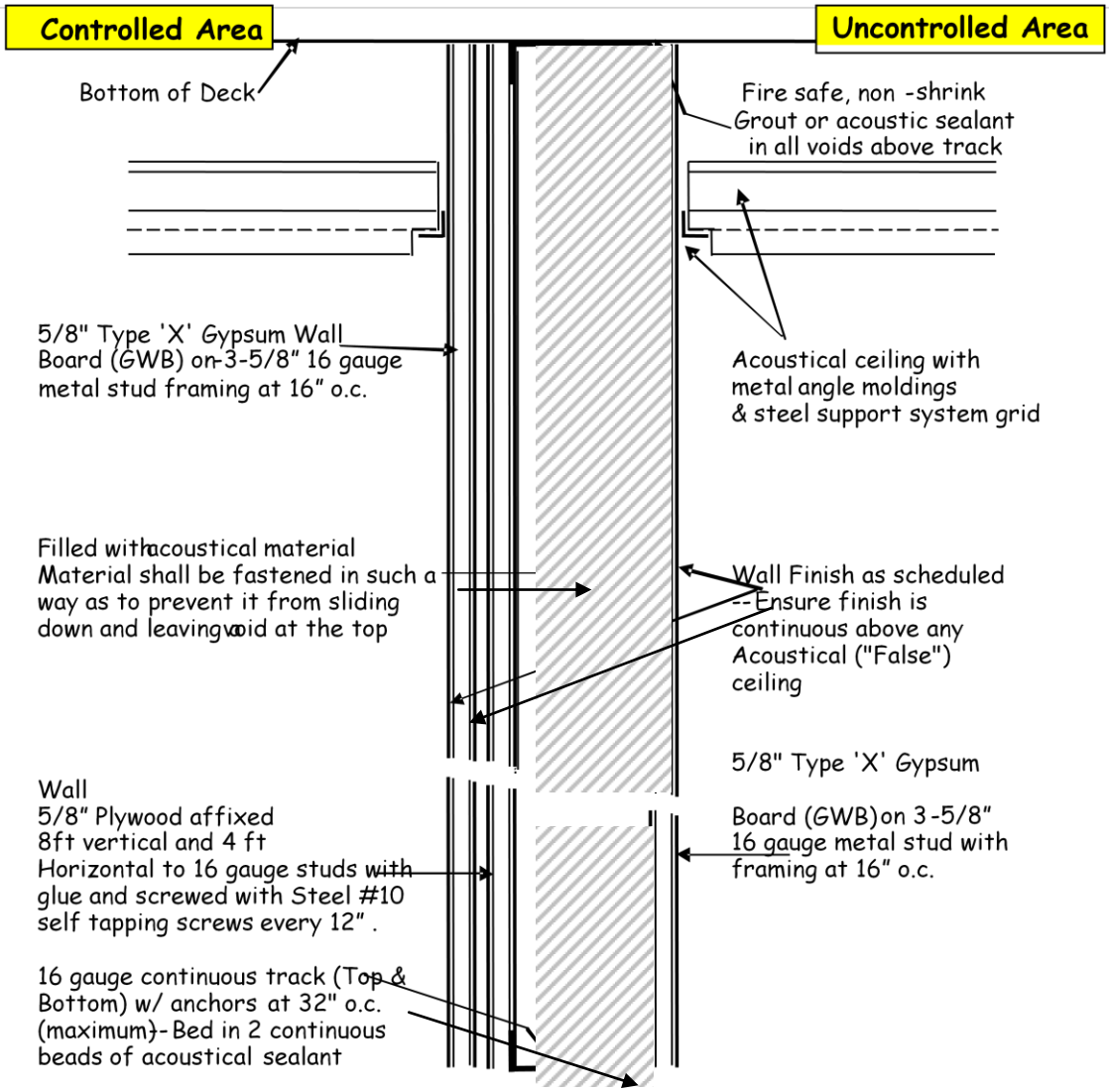

Notes:

1 This details intended for 'new construction'

2 CTTA recommended countermeasures (foil backed wallboard or R Foil) shall be installed IAW *Best Practice Guidelines for Architectural Radio Frequency Shielding*

3 Any electrical or communications outlets required on walls shall be surface mounted

Figure 4

Typical Perimeter Air (Z) Duct Penetration

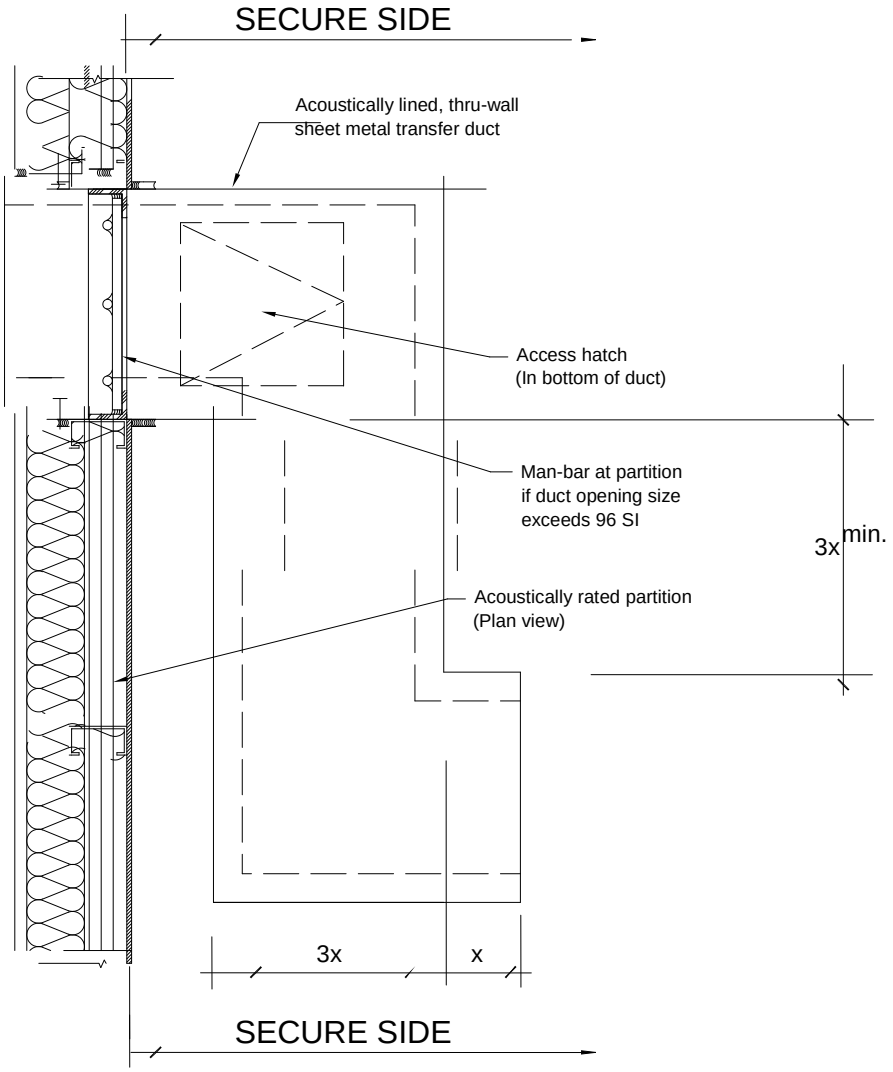

Rev. 04-05

Chapter 4. SCIFs Outside the U.S. and NOT Under Chief of Mission (COM) Authority

A. General

1. Requirements outlined here apply only to SCIFs located outside of the U.S., its territories and possessions, that are not under COM authority.

2. The application and effective use of SID may allow AOs to deviate from this guidance at Category II and III facilities.

B. Establishing Construction Criteria Using Threat Ratings

1. The Department of State's (DoS) Security Environment Threat List (SETL) shall be used in the selection of appropriate construction criteria based on technical threat rating.

2. If the SETL does not have threat information for the city of construction, the SETL threat rating for the closest city within a given country shall apply. When only the capital is noted, it will represent the threat for all SCIF construction within that country.

3. Based on technical threat ratings, building construction has been divided into the following three categories for construction purposes:

- Category I - Critical or High Technical Threat, High Vulnerability Buildings
- Category II - High Technical Threat, Low Vulnerability Buildings
- Category III - Low and Medium Technical Threat

4. Facilities in Category I Areas

a) Open Storage Facilities

(1) Open storage is to be avoided in Category I areas. The head of the IC element shall certify mission essential need and approve on case-by-case basis. When approved, open storage should only be allowed when the host facility is manned 24-hours-per-day by a cleared U.S. presence or the SCIF is continuously occupied by U.S. SCI-indoctrinated personnel.

(2) SCI shall be contained within approved vaults or Class M or greater modular vaults.

(3) The SCIF shall be alarmed in accordance with Chapter 7.

(4) Access control shall be in accordance with Chapter 8.

(5) An alert system and/or duress alarm is recommended.

(6) Initial alarm response time shall be five minutes.

b) Closed Storage Facilities

(1) The SCIF perimeter shall provide five minutes of forced-entry protection. (Refer to Wall B or Wall C construction methods.)

(2) The SCIF shall be alarmed in accordance with Chapter 7.

(3) Access control system shall be in accordance with Chapter 8.

(4) SCI shall be stored in GSA-approved containers or in an area that meets vault construction standards.

(5) Initial alarm response time shall be within 15 minutes.

c) Continuous Operation Facilities

(1) An alert system and duress alarm is required.

(2) The capability shall exist for storage of all SCI in GSA-approved security containers or vault.

(3) The emergency plan shall be tested semi-annually.

(4) Perimeter walls shall comply with enhanced wall construction methods in accordance Wall B or C standards.

(5) The SCIF shall be alarmed in accordance with Chapter 7.

(6) Access control shall be in accordance with Chapter 8.

(7) Initial response time shall be five minutes.

d) SWAs

Construction and use of SWAs is not authorized for facilities in Category I areas because of the significant risk to SCI.

e) TSWAs

Construction and use of TSWAs is not authorized for facilities in Category I areas because of the significant risk to SCI.

5. Facilities in Category II and III Areas

a) Open Storage Facilities

(1) Open storage is to be avoided in Category II areas. The head of the IC element shall certify mission essential need and approve on case-by-case basis. When approved, open storage should only be allowed when the host facility is manned 24-hours-per-day by a cleared U.S. presence or the SCIF is continuously occupied by U.S. SCI-indoctrinated personnel.

(2) In Category III areas, open storage should only be allowed when the host facility is manned 24-hours-per-day by a cleared U.S. presence or the SCIF is continuously occupied by U.S. SCI-indoctrinated personnel.

(3) The SCIF perimeter shall provide five minutes of forced-entry protection. (Refer to Wall B or Wall C construction methods.)

(4) The SCIF shall be alarmed in accordance with Chapter 7.

(5) Access control shall be in accordance with Chapter 8.

(6) An alert system and/or duress alarm is recommended.

(7) Initial alarm response time shall be five minutes.

b) Closed Storage Facilities

(1) The SCIF perimeter shall provide five minutes of forced-entry protection. (Refer to Wall B or Wall C construction methods.)

(2) The SCIF must be alarmed in accordance with Chapter 7.

(3) Access control system shall be in accordance with Chapter 8.

(4) SCI shall be stored in GSA-approved containers.

(5) Initial alarm response time shall be within 15 minutes.

c) Continuous Operation Facilities

(1) Wall A - Standard wall construction shall be utilized.

(2) The SCIF shall be alarmed in accordance with Chapter 7.

(3) Access control shall be in accordance with Chapter 8.

(4) Initial response time shall be five minutes.

(5) An alert system and/or duress alarm is recommended.

(6) The capability shall exist for storage of all SCI in GSA-approved security containers.

(7) The emergency plan shall be tested semi-annually.

d) SWAs

(1) Perimeter walls shall comply with standard Wall A construction.

(2) The SCIF shall be alarmed in accordance with Chapter 7.

(3) Access control shall be in accordance with Chapter 8.

(4) Initial alarm response time shall be within 15 minutes.

(5) The SWA shall be controlled at all times by SCI-indoctrinated individuals or secured with a GSA-approved combination lock.

(6) An alert system and/or duress alarm is recommended.

(7) All SCI used in an SWA shall be removed and stored in GSA-approved security containers within a SCIF or be destroyed.

(8) The emergency plan shall be tested semi-annually.

e) TSWAs

(1) No special construction is required.

(2) The AO may require an alarm system.

(3) When the TSWA is approved for SCI discussions, sound attenuation specifications of Chapter 9 shall be met.

(4) When a TSWA is in use at the SCI level, access shall be limited to SCI-indoctrinated persons.

(5) The AO may require a TSCM evaluation if the facility has not been continuously controlled at the SECRET level.

(6) When a TSWA is **not** in use at the SCI level, the following shall apply:

(a) The TSWA shall be secured with a high security, AO-approved key or combination lock.

(b) Access shall be limited to personnel possessing a U.S. SECRET clearance.

C. Personnel

1. SSM Responsibilities

a) Ensures the security integrity of the construction site (hereafter referred to as the "site").

b) Develops and implements a CSP.

c) Ensures that the SSM shall have 24-hour unrestricted access to the site (or alternatives shall be stated in CSP).

d) Conducts periodic security inspections for the duration of the project to ensure compliance with the CSP.

e) Documents security violations or deviations from the CSP and notifies the AO.

f) Maintains a list of all workers used on the project; this list shall become part of the facility accreditation files.

g) Implements procedures to deny unauthorized site access.

h) Works with the construction firm(s) to ensure security of the construction site and compliance with the requirements set forth in this document.

i) Notifies the AO if any construction requirements cannot be met.

2. CST Requirements and Responsibilities

a) Possesses U. S. TOP SECRET clearances.

b) Is specially trained in surveillance and the construction trade to deter technical penetrations and thwart implanted technical collection devices.

c) Supplements site access controls, implements screening and inspection procedures, and, when required by the CSP, monitors construction and personnel.

d) Is not required when U.S. TOP SECRET-cleared contractors are used

e) In Category III countries, must do the following:

(1) Shall begin surveillance of non-cleared workers at the start of SCIF construction or the installation of major utilities, whichever comes first.

(2) Upon completion of all work, shall clear and secure the areas for which they are responsible prior to turning control over to the cleared American guards (CAGs).

f) In Category I and II countries, must do the following:

(1) Shall begin surveillance of non-cleared workers at the start of construction of public access or administrative areas adjacent to the SCIF, SCIF construction, or the installation of major utilities, whichever comes first.

(2) Upon completion of all work, shall clear and secure the areas for which the CST is responsible prior to turning over control to the CAGs.

g) On U.S. military installations, when the AO considers the risk acceptable, alternative countermeasures may be substituted for the use of a CST as prescribed in the CSP.

3. CAG Requirements and Responsibilities

a) Possesses a U.S. SECRET clearance (TOP SECRET required under COM authority)

b) Performs access-control functions at all vehicle and pedestrian entrances to the site except as otherwise noted in the CSP.

(1) Screens all non-cleared workers, vehicles, and equipment entering or exiting the site.

(2) Denies introduction of prohibited materials, such as explosives, weapons, electronic devices, or other items as specified by the AO or designee.

(3) Conducts random inspections of site areas to ensure no prohibited materials have been brought on to the site. (All suspicious materials or incidents shall be brought to the attention of the SSM or CST.)

D. Construction Security Requirements

1. Prior to awarding a construction contract, a CSP for each project shall be developed by the SSM and approved by the AO.

2. Construction plans and all related documents shall be handled and protected in accordance with the CSP.

3. For SCIF renovation projects, barriers shall be installed to segregate construction workers from operational activities. These barriers will provide protection against unauthorized access and visual observation. Specific guidance shall be contained in the CSP.

4. When expanding existing SCIF space into areas not controlled at the SECRET level, maximum demolition of the new SCIF area is required.

5. For areas controlled at the SECRET level, or when performing renovations inside existing SCIF space, maximum demolition is not required.

6. All requirements for demolition shall be documented in the CSP.

7. Citizenship and Clearance Requirements for SCIF Construction Personnel

a) Use of workers from countries identified in the SETL as "critical technical threat level" or listed on the DoS Prohibited Countries Matrix is prohibited.

b) General construction of SCIFs shall be performed using U.S. citizens and U.S. firms.

c) SCIF finish work (work that includes closing up wall structures; installing, floating, taping and sealing wallboards; installing trim, chair rail, molding, and floorboards; painting; etc.) in Category III countries shall be accomplished by SECRET-cleared, U.S. personnel.

d) SCIF finish work (work that includes closing up wall structures; installing, floating, taping and sealing wallboards; installing trim, chair rail, molding, and floorboards; painting; etc.) in Category I and II countries shall be accomplished by TOP SECRET-cleared, U.S. personnel.

e) On military facilities, the AO may authorize foreign national citizens or firms to perform general construction of SCIFs. In this situation, the SSM shall prescribe, with AO approval, mitigating strategies to counter security and counterintelligence threats.

f) All non-cleared construction personnel shall provide the SSM with biographical data (full name, current address, Social Security Number (SSN), date and place of birth (DPOB), proof of citizenship, etc.), and fingerprint cards as allowed by local laws prior to the start of construction/renovation.

(1) Two forms of I-9 identification are required to verify U.S. persons.

(2) Whenever host nation agreements or Status of Forces Agreements make this information not available, it shall be addressed in the CSP.

g) When non-U.S. citizens are authorized by the AO:

(1) The SSM shall conduct checks of criminal and subversive files, local, national, and host country agency files, through liaison channels and consistent with host country laws.

(2) Checks shall be conducted of CIA indices through the country's Director of National Intelligence (DNI) representative and appropriate in-theater U.S. military authorities.

h) Access to sites shall be denied or withdrawn if adverse security, Counterintelligence (CI), or criminal activity is revealed. The SSM shall notify the AO when access to the site is denied or withdrawn.

i) For new facilities, the following apply:

(1) Non-cleared workers, monitored by CSTs, may perform the installation of major utilities and feeder lines.

(2) Installation shall be observed at perimeter entry points and when any trenches are being filled.

(3) The number of CSTs shall be determined by the size of the project (square footage and project scope) as outlined in the CSP.

j) For existing facilities, the following apply:

(1) Non-cleared workers, monitored by CSTs or cleared escorts, may perform maximum demolition and debris removal.

(2) TOP SECRET-cleared workers shall be used to renovate or construct SCIF space.

(3) SECRET-cleared individuals may perform the work when escorted by TOP SECRET-cleared personnel.

(4) SCI-indoctrinated escorts are not required when the existing SCIF has been sanitized or a barrier has been constructed to separate the operational areas from the areas identified for construction.

k) Prior to initial access to the site, all construction personnel shall receive a security briefing by the SSM or designee on the security procedures to be followed.

l) If a construction worker leaves the project under unusual circumstances, the SSM shall document the occurrence and notify the AO. The AO shall review for CI concerns.

m) The SSM may require cleared escorts or CSTs for non-cleared workers performing work exterior to the SCIF that may affect SCIF security.

n) The ratio of escort personnel to construction personnel shall be determined by the SSM on a case-by-case basis and documented in the CSP. Prior to assuming escort duties, all escorts shall receive a briefing regarding their responsibilities.

8. Access Control of Construction Sites

a) Access control to the construction site and the use of badges are required.

b) Guards are required for SCIF construction outside the U.S.

c) All site control measures used shall be documented in the CSP. The following are site control measures that should be considered:

- Identity verification.
- Random searches at site entry and exit points.
- Signs, in English and other appropriate languages, at all entry points listing prohibited and restricted items (e.g., cameras, firearms, explosives, drugs, etc.).
- Physical security barriers to deny unauthorized access.
- Vehicle inspections.

d) Guards

(1) Local guards, supervised by CAGs and using procedures established by the AO and documented in the CSP, may search all non-cleared personnel, bags, toolboxes, packages, etc., each time they enter or exit the site.

(2) In Category I countries, CAGs shall be assigned to protect the site and surrounding area as defined in the CSP.

(3) For existing SCIFs, TOP SECRET/SCI-indoctrinated guards are not required to control access to the site or secure storage area (SSA) provided that TOP SECRET/SCI-indoctrinated personnel are present on a 24-hour basis and prescribed post security resources are in place.

(4) Use of non-cleared U.S. guards or non-U.S. guards to control access to the site or SSA requires the prior approval of the AO. A SECRET-cleared, U.S. citizen must supervise any non-cleared or non-U.S. guards. Non-cleared or non-U.S. guards shall not have unescorted access to the site.

E. Procurement of Construction Materials

1. General Standards. These standards apply to construction materials (hereafter referred to as “materials”) used in SCIF construction outside the U.S. These standards do not apply to installations on a roof contiguous to the SCIF provided there is no SCIF penetration.

a) Procurements shall be in accordance with Federal Acquisition Regulations.

b) In exceptional circumstances, SSMs may deviate from procurement standards with a waiver; such deviation shall be noted in the CSP.

c) For building construction projects in Category III countries, cleared U.S. citizens may randomly select up to 35% of building materials from non-specific general

construction materials for SCIF construction. Random selection may exceed 35% only if materials can be individually inspected.

d) For building construction projects in Category I and II countries, cleared U.S. citizens may randomly select up to 25% of building materials from non-specific general construction materials for SCIF construction. Random selection may exceed 25% only if materials can be individually inspected.

e) Procurement of materials from host or third party countries identified in the SETL as critical for technical intelligence or listed in the DoS Prohibited Countries Matrix is prohibited.

f) All such materials must be selected immediately upon receipt of the shipment and transported to secure storage.

2. Inspectable Materials

a) Inspectable materials may be procured from U.S. suppliers without security restrictions.

b) The purchase of inspectable materials from host or third party countries requires advanced approval from the AO.

c) Procurement of materials from host or third party countries identified in the SETL as critical for technical intelligence or listed in the DoS Prohibited Countries Matrix is prohibited.

d) All inspectable materials procured in host and third party countries, or shipped to site in unsecured manner, shall be inspected using an AO-approved method as outlined in the CSP and then moved to an SSA.

e) Random selection of all inspectable material selected from stock stored outside of the SSA shall be inspected using AO-approved methods outlined in the CSP prior to use in SCIF construction.

3. Non-Inspectable Materials

a) Non-inspectable materials may be procured from U.S. suppliers or other AO-approved channels with subsequent secure transportation to the SSA at the construction site.

b) Non-inspectable materials may be procured in a host or third party country if randomly selected by U.S. citizens with a security clearance level approved by the AO.

c) Materials shall be randomly chosen from available suppliers (typically three or more) without advance notice to, or referral from, the selected supplier and without reference of the intended use of material in a SCIF.

d) Selections shall be made from available shelf stock and transported securely to an SSA.

e) Procurement officials should be circumspect about continually purchasing non-inspectable materials from the same local suppliers, and thereby establishing a pattern that could be reasonably discernible by hostile intelligence services, foreign national staff, and suppliers.

F. Secure Transportation for Construction Material

1. Inspectable Materials

a) Secure transportation of inspectable materials is not required, but materials shall be inspected using procedures approved by the AO prior to use.

b) Once inspected, all inspectable materials shall be stored in a SSA prior to use.

c) If securely procured, securely shipped, and stored in a secure environment, inspectable materials may be utilized within the SCIF without inspection.

2. Non-Inspectable Materials

a) Non-inspectable materials include inspectable materials when the site does not possess the capability to inspect them by AO-approved means.

b) Non-inspectable materials shall be securely procured and shipped to site by secure transportation from the U.S., a secure logistics facility, or low threat third party country using one of the following secure methods:

(1) Securely packaged or containerized and under the 24-hour control of an approved courier or escort office. (Escorted shipments shall be considered compromised if physical custody or direct visual observation is lost by the escort officer during transit. Non-inspectable materials that are confirmed or suspected of compromise shall not be used in a SCIF.)

(2) Securely shipped using approved transit security technical safeguards capable of detecting evidence of tampering or compromise. (An unescorted container protected by technical means ("trapped") is considered compromised if evidence of tampering of the protective technology is discovered, or if an unacceptable deviation from the approved transit security plan occurs. Non-inspectable materials that are confirmed or suspected of compromise shall not be used in a SCIF.).

(3) Non-inspectable materials shall be shipped using the following surface and air carriers in order of preference:

- U.S. Military
- U.S. Flag Carriers
- Foreign Flag Carriers

G. Secure Storage of Construction Material

1. A SSA shall be established and maintained for the secure storage of all SCIF construction material and equipment. An SSA is characterized by true floor to true ceiling, slab-to-slab construction of some substantial material, and a solid wood-core or steel-clad door equipped with an AO-approved security lock.

2. All inspected and securely shipped materials shall be placed in the SSA upon arrival and stored there until required for installation.

3. Alternative SSAs may include the following:

   a) A shipping container located within a secure perimeter that is locked, alarmed, and monitored.

   b) A room or outside location enclosed by a secure perimeter that is under direct observation by a SECRET-cleared U.S. citizen.

4. The SSA shall be under the control of CAGs or other U.S. personnel holding at least U.S. SECRET clearances.

5. Supplemental security requirements for SSAs shall be set forth in the CSP and may vary depending on the location and/or threat to the construction site.

H. Technical Security

1. TEMPEST countermeasures shall be pre-engineered into the construction of the SCIF.

2. In Category I countries, a TSCM inspection shall be required for new SCIF construction or for significant renovations (50% or more of SCIF replacement cost).

3. In Category II and III countries, a TSCM inspection may be required by the AO for new SCIF construction or significant renovations (50% or more of SCIF replacement cost).

4. A TSCM inspection shall be required if uncontrolled space is converted (maximum demolition) to new SCIF space.

5. When a TSCM inspection is not conducted, a mitigation strategy based on a physical security inspection that identifies preventative and corrective countermeasures shall be developed to address any technical security concerns.

I. Interim Accreditations

1. Upon completion of a successful inspection, the respective agency's AO may issue an Interim Accreditation pending receipt of required documentation.

2. If documentation is complete, AOs may issue an Interim Accreditation pending the final inspection.

Chapter 5. SCIFs Outside the U.S. and Under Chief of Mission Authority

A. Applicability

1. This portion applies to the construction of SCIFs located overseas and that are on any compound that falls under the DoS COM authority or created to support any Tenant Agency that falls under COM authority.

2. The creation of new SCIF space at facilities that fall under COM authority is governed by both ICDs and Overseas Security Policy Board (OSPB) standards published as 12 Foreign Affairs Handbook-6 (12 FAH-6). If there is a conflict between the standards, the more stringent shall apply.

3. For SCIFs constructed in new facilities (new compound or new office building under COM authority), the proponent activity shall coordinate specific requirements for the proposed SCIF with the DoS/Overseas Buildings Operations (OBO).

4. For existing facilities under COM authority, the project proponent activity must coordinate SCIF requirements with DoS/Bureau of Diplomatic Security (DS), the affected Embassy or Consulate (through the Regional Security Officer (RSO) and General Services Officer (GSO)), and DoS/OBO.

5. Temporary or tactical SCIFs may only be authorized by exception for facilities under COM authority. The AO of the tenant agency shall notify both the RSO and the DoS AO of the requirement and the expected duration of these facilities. Prior to accreditation, the tenant agency AO must coordinate with the DoS AO.

B. General Guidelines

1. SCIFs located under COM authority outside the U.S. are located within the CAA.

2. Prior to initiating any SCIF implementation process for upgrade or new construction in an existing office building, the tenant agency CSA shall do the following:

   a) Obtain concurrence from the Post‘s Counterintelligence Working Group (CIWG).

   b) Obtain written approval from the COM.

   c) Notify the DoS AO of CWIG and COM approvals.

   d) Coordinate OSPB preliminary survey with the post RSO/Engineering Services Office (ESO) if space is not core CAA.

3. A Preliminary Survey shall be developed by the RSO/ESO and submitted to DoS/DS for review and approval prior to awarding a construction contract. A CSP shall then be developed by the tenant and forwarded to DoS/OBO for processing.

4. All SCIF design, construction, or renovation shall be in compliance with OSPB standards for facilities under COM authority.

5. Any waivers that are granted for a SCIF by a waiver authority that would result in non-compliance with OSPB standards shall require an exception to OSPB standards from DoS/DS.

6. Written approval of the request for an exception to OSPB standards must be received prior to the commencement of any construction projects.

7. Upon completion of construction, the tenant agency AO will accredit the SCIF for SCI operations.

C. Threat Categories

1. The DoS SETL shall be used in the selection of appropriate construction criteria. Based on technical threat ratings, building construction has been divided into three categories for construction purposes:

- Category I - Critical or High Technical Threat, High Vulnerability Buildings
- Category II - High Technical Threat, Low Vulnerability Buildings
- Category III - Low and Medium Technical Threat

2. High and Low Vulnerability Buildings will be determined in accordance with the definitions in the OSPB standards.

3. SCIF design and construction shall comply with the building codes utilized by DoS/OBO.

4. SCIF construction projects are subject to the DoS Construction Security Certification requirements stipulated in Section 160 (a), Public Law 100-204, as amended. Construction activities may not commence until the required certification has been obtained from DoS.

5. SCIF construction projects are subject to permit requirements established by DoS/OBO.

6. Open storage in Category I and II areas is to be avoided. The CSA shall certify mission-essential need and approve on a case-by-case basis.

7. Open storage shall only be allowed for Category III posts when the host facility is manned 24-hours per day by a cleared U.S. presence (i.e., Marine Security Guard).

8. Open storage of SCI material is not authorized in lock-and-leave facilities (i.e., no Marine Security Guard).

D. Construction Requirements

1. Perimeter Wall Construction (all facilities regardless of type or location).

   a) The SCIF perimeter shall provide five minutes of forced-entry protection.

   b) Perimeter walls shall comply with enhanced wall construction with plywood. (See drawing for Wall C.)

   c) Perimeter shall meet acoustic protection standards unless designated as a non-discussion area.

2. All SCIFs must be alarmed in accordance with Chapter 7.

3. Initial alarm response times shall be within 15 minutes for closed storage and five minutes for open storage.

4. Access control systems shall be in accordance with Chapter 8.

5. SCI shall be stored in GSA-approved containers.

6. An alert system and/or duress alarm is recommended.

7. Continuous Operation Facilities

   a) An alert system and/or duress alarm is recommended.

   b) The capability shall exist for storage of all SCI in GSA-approved security containers.

   c) The emergency plan shall be tested semi-annually.

   d) The SCIF shall be alarmed in accordance with Chapter 7.

   e) Access control shall be in accordance with Chapter 8.

   f) Initial response time shall be five minutes.

8. TSWAs

   a) When a TSWA is in use at the SCI level, the following apply:

      (1) Unescorted access shall be limited to SCI-indoctrinated persons.

      (2) The AO may require an alarm system.

      (3) No special construction is required.

      (4) When the TSWA is approved for SCI discussions the following apply:

         - Sound attenuation specifications of Chapter 9 shall be met.
         - The AO may require a TSCM evaluation if the facility has not been continuously controlled at the SECRET level.

b) When the TSWA is **not** in use at the SCI level, the following shall apply:

(1) The TSWA shall be secured with a DoS/DS-approved key or combination lock.

(2) Unescorted access shall be limited to personnel possessing a U.S. SECRET clearance.

9. SWA

a) Initial alarm response times shall be within 15 minutes.

b) The SWA shall be controlled at all times by SCI-indoctrinated individuals or secured with a GSA-approved combination lock.

c) The SWA shall be alarmed in accordance with Chapter 7.

d) Access control shall be in accordance with Chapter 8.

e) Perimeter walls shall comply with standard Wall A.

f) An alert system and/or duress alarm is recommended.

g) All SCI used in a SWA shall be removed and stored in GSA-approved security containers within a SCIF or be destroyed.

h) There shall be an emergency plan that is tested semi-annually.

E. Personnel

1. SSM Requirements and Responsibilities

a) Possesses a U.S. TOP SECRET clearance.

b) Ensures the security integrity of the construction site.

c) Develops and implements a CSP.

d) Shall have 24-hour unrestricted access to the site (or alternatives shall be stated in CSP).

e) Conducts periodic security inspections for the duration of the project to ensure compliance with the CSP.

f) Documents security violations or deviations from the CSP and notifies the RSO and the tenant AO.

g) Maintains a list of all workers utilized on the project; this list shall become part of the facility accreditation files.

h) Implements procedures to deny unauthorized site access.

i) Works with the construction firm(s) to ensure security of the construction site and compliance with the requirements set forth in this document.

j) Notifies the RSO and tenant AO if any construction requirement cannot be met.

2. CST Requirements and Responsibilities

a) Possesses a TOP SECRET clearance.

b) Is specially trained in surveillance and the construction trade to deter technical penetrations and to detect implanted technical collection devices.

c) Supplements site access controls, implements screening and inspection procedures, and when required by the CSP, monitors construction and personnel.

d) Is not required when contractors who are U.S. citizens with U.S. TOP SECRET clearances are used.

e) In Category III countries the following shall apply:

(1) The CST shall begin surveillance of non-cleared workers at the start of SCIF construction.

(2) Upon completion of all work, the CST shall clear and secure the areas for which they are responsible prior to turning control over to the CAGs.

f) In Category I and II countries the following shall apply:

(1) The CST shall begin surveillance of non-cleared workers at the start of construction of public access or administrative areas adjacent to the SCIF, or SCIF construction, whichever comes first.

(2) Upon completion of all work, the CST shall clear and secure the areas for which the CST is responsible prior to turning over control to the CAGs.

3. CAG Requirements and Responsibilities

a) Possesses a U.S. TOP SECRET clearance.

b) Performs access control functions at all vehicle and pedestrian entrances to the site except as otherwise noted in the CSP.

(1) Screens all non-cleared workers, vehicles, and equipment entering or exiting the site.

(2) Uses walk-through and/or hand-held metal detectors or other means approved by the RSO or designee to deny introduction of prohibited materials such as explosives, weapons, electronic devices, or other items as specified by the RSO or designee.

(3) Conducts random inspections of site areas to ensure no prohibited materials have been brought on to the site. All suspicious materials or incidents shall be brought to the attention of the SSM.

c) In Category III countries, CAGs shall be assigned to protect the site and surrounding area at the start of construction of the SCIF or commencement of operations of the SSA.

d) In Category I and II countries, CAGs shall be assigned to protect the site and surrounding area at the start of construction of the SCIF, areas adjacent to the SCIF, or commencement of operations of the SSA.

e) For existing SCIFs, TOP SECRET/SCI-indoctrinated U.S. citizen guards are not required to control access to the site or SSA provided the following apply:

(1) TOP SECRET/SCI-indoctrinated U.S. citizens are present on a 24-hour basis in the SCIF or the SCIF can be properly secured and alarmed.

(2) Prescribed post security resources are in place to monitor the SSA.

F. Construction Security Requirements

1. Prior to awarding a construction contract, a CSP for each project shall be developed by the SSM and approved by DoS/DS and DoS/OBO and the tenant AO.

2. Construction plans and all related documents shall be handled and protected in accordance with the CSP.

3. For SCIF renovation projects, barriers shall be installed to segregate construction workers from operational activities. These barriers will provide protection against unauthorized access and visual observation. Specific guidance shall be contained in the CSP.

4. When expanding existing SCIF space into areas not controlled at the SECRET level, maximum demolition of the new SCIF area is required.

5. For areas controlled at the SECRET level that meet OSPB pre-conditions, or when performing renovations inside existing SCIF space, maximum demolition is not required.

6. All requirements for demolition shall be documented in the CSP.

7. Periodic security inspections shall be conducted by the SSM or designee for the duration of the project to ensure compliance with construction design and security standards.

8. Citizenship and Clearance Requirements for SCIF Construction Personnel

a) Use of workers from countries identified as critical for Technical or Human Intelligence threat, or listed on the DoS Prohibited Countries Matrix, is prohibited.

b) General construction and finish work is defined by OSPB standards.

c) General construction of SCIFs shall be performed using U.S. citizens and U.S. firms. Use of foreign national citizens or firms to perform general construction of SCIFs may be authorized in accordance with OSPB standards. In this situation, the CSP shall prescribe mitigating strategies to counter security and counterintelligence threats.

d) SCIF finish work shall be accomplished by appropriately cleared personnel as directed by OSPB standards for CAA construction.

e) All non-cleared construction personnel shall provide the SSM with biographical data (full name, current address, SSN, DPOB, proof of citizenship, etc.), and fingerprint cards as allowed by local laws prior to the start of construction/renovation.

f) Two forms of I-9 identification are required to verify U.S. persons.

g) Whenever host nation agreements make this information not available, it shall be addressed in the CSP.

h) When non-U.S. citizens are authorized, the following shall apply:

(1) The SSM shall conduct, through liaison channels, checks of criminal and subversive files, local and national; and host country agencies, consistent with host country laws.

(2) Checks shall also be conducted of CIA indices through the country's DNI representative and appropriate in-theater U.S. military authorities.

(3) Access to sites shall be denied or withdrawn if adverse security, CI, or criminal activity is revealed. The SSM shall notify the AO and RSO when access to the site is denied or withdrawn.

(4) For existing facilities, the following apply:

- Non-cleared workers monitored by CSTs may perform maximum demolition for conversion of non-CAA to SCIF. Debris removal by non-cleared workers must be monitored at a minimum by cleared U. S. citizen escorts.
- TOP SECRET-cleared U.S. citizens must perform maximum demolition within, or penetrating the perimeter of, an existing SCIF.
- TOP SECRET-cleared U.S. citizens shall be used to renovate SCIF space.
- SECRET-cleared individuals may perform the work when escorted by TOP SECRET-cleared U.S. citizens.
- SCI-indoctrinated escorts are not required when the existing SCIF has been sanitized or a barrier has been constructed to separate the operational areas from the areas identified for construction.

i) Prior to initial access to the site, all construction personnel shall receive a security briefing by the SSM or designee on the security procedures to be followed.

j) If a construction worker leaves the project under unusual circumstances, the SSM shall document the occurrence and notify the RSO and tenant AO. The RSO shall review for CI concerns.

k) The SSM may require cleared escorts or CSTs for non-cleared workers performing work exterior to the SCIF that may affect SCIF security.

l) The ratio of escort personnel to construction personnel shall be determined by the SSM on a case-by-case basis and documented in the CSP. Prior to assuming escort duties, all escorts shall receive a briefing regarding their responsibilities.

9. Access Control of Construction Sites

a) Access control to the construction site and the use of badges are required.

b) Guards are required for SCIF construction outside the U.S.

c) All site control measures used shall be documented in the CSP.

d) The following site control measures should be considered:

(1) Identity verification.

(2) Random searches at site entry and exit points.

(3) Signs, in English and other appropriate languages, at all entry points listing prohibited and restricted items (e.g., cameras, firearms, explosives, drugs, etc.).

(4) Physical security barriers to deny unauthorized access.

(5) Vehicle inspections.

10. Local Guards

a) Local guards, supervised by CAGs and using procedures established by the RSO and documented in the CSP, may search all non-cleared personnel, bags, toolboxes, packages, etc., each time they enter or exit the site.

b) Use of non-cleared U.S. guards or non-U.S. guards to control access to the site or secure storage area (SSA) requires the prior approval of the RSO. A SECRET-cleared U.S. citizen must supervise non-cleared or non-U.S. guards. Non-cleared or non-U.S. guards shall not have unescorted access to the site.

G. Procurement of Construction Materials

1. General Standards

a) These standards apply to construction materials used in SCIF construction under COM authority. These standards do not apply to installations on a roof contiguous to the SCIF provided there is no SCIF penetration.

b) Procurements shall be in accordance with Federal Acquisition Regulations.

c) In exceptional circumstances, SSMs may deviate from procurement standards with a waiver; such deviation shall be noted in the CSP.

d) For building construction projects in Category III countries, cleared U.S. citizens may randomly select up to 35% of building materials from non-specific general construction materials for SCIF construction. Random selection may exceed 35% only if materials can be individually inspected.

e) For building construction projects in Category I and II countries, cleared U.S. citizens may randomly select up to 25% of building materials from non-specific general construction materials for SCIF construction. Random selection may exceed 25% only if materials can be individually inspected.

f) All such materials must be selected immediately upon receipt of the shipment and transported to secure storage.

g) Procurement of materials from host or third party countries identified in the SETL as critical for technical intelligence, or listed on the DoS Prohibited Countries Matrix, is prohibited.

2. Inspectable Materials Specifically Destined for SCIF Construction

a) Inspectable materials specifically destined for SCIF construction may be procured from U.S. third-country or local suppliers without security restrictions.

b) All inspectable materials specifically destined for SCIF construction procured in host and third party countries or shipped to site in an unsecured manner from the U.S. shall be inspected using a DoS/DS-approved method and then moved to an SSA.

c) All inspectable material selected from stock stored outside of the SSA shall be inspected using DoS/DS-approved methods prior to use in SCIF construction.

3. Non-Inspectable Materials Specifically Destined for SCIF Construction

a) Non-inspectable materials specifically destined for SCIF construction shall be procured from U.S. suppliers with subsequent secure transportation to the SSA at the construction site.

b) On an exceptional basis, non-inspectable materials may be procured in a host or third party country if randomly selected by cleared U.S. citizens.

(1) Materials shall be randomly chosen from available suppliers (typically three or more) without advance notice to, or referral from, the selected supplier and with no reference of the intended use of material in a SCIF.

(2) Such selections shall be made from available shelf stock, brought immediately under personal control of a cleared U.S. citizen, and transported securely to an SSA.

(3) Procurement officials should be circumspect about continually purchasing non-inspectable materials from the same local suppliers and establishing a pattern that could be reasonably discernible by hostile intelligence services, foreign national staff, and suppliers.

H. Secure Transportation for Construction Material

1. Inspectable Materials Specifically Destined for SCIF Construction

   a) Inspectable materials do not require secure transportation but shall be inspected using procedures approved by the DoS/DS prior to use in the SCIF.

   b) Once inspected, all inspectable items shall be stored in an SSA.

   c) Materials may be utilized within the SCIF without inspection if securely procured, securely shipped, and stored in a secure environment.

2. Non-inspectable Materials Specifically Destined for SCIF Construction

   a) Non-inspectable material includes inspectable materials when the site does not possess the capability to inspect by Do/DS-approved means.

   b) Non-inspectable materials shall be securely procured and shipped to site by secure transportation from the U.S., a secure logistics facility, or low threat third party country using one of the following secure methods:

      (1) Securely packaged or containerized and under the 24-hour control of an approved courier or escort officer. (Escorted shipments shall be considered compromised if physical custody or direct visual observation is lost by the escort officer during transit. Non-inspectable materials that are confirmed compromised or suspected of compromise shall not be used in a SCIF.)

      (2) Securely shipped using approved transit security technical safeguards capable of detecting evidence of tampering or compromise. (An unescorted container protected by technical means ("trapped") is considered compromised if evidence of tampering of the protective technology is discovered, or if an unacceptable deviation from the approved transit security plan occurs. Non-inspectable materials that are confirmed compromised or suspected of compromise shall not be used in a SCIF.)

      (3) Non-inspectable materials shall be shipped using the following surface and air carriers in order of preference:

         - U.S. Military
         - U.S. Flag Carriers
         - Foreign Flag Carriers

I. Secure Storage of Construction Material

1. Upon arrival, all inspected and securely shipped materials shall be placed in the SSA until required for installation.

2. An SSA shall be established and maintained for the secure storage of all SCIF construction material and equipment. It is characterized by true floor to true ceiling, slab-to-slab construction of some substantial material and a solid wood-core or steel-clad door equipped with a DoS/DS-approved security lock.

3. Alternative SSA's may include a shipping container located within a secure perimeter that is locked, alarmed, and monitored, or a room or outside location enclosed by a secure perimeter that is under direct observation by a SECRET-cleared U.S. citizen.

4. The SSA shall be under the control of CAGs or other U.S. citizens holding at least U.S. SECRET clearances.

5. Supplemental security requirements for SSAs shall be set forth in the CSP and may vary depending on the location and/or threat to the construction site.

J. Technical Security

1. TEMPEST countermeasures shall be pre-engineered into the building.

2. A TSCM inspection shall be required in Category I countries for new SCIF construction or significant renovations (50% or more of SCIF replacement cost).

3. A TSCM inspection may be required by the AO in Category II or III countries for new SCIF construction or significant renovations (50% or more of SCIF replacement cost).

4. A TSCM inspection, conducted at the completion of construction, shall be required if uncontrolled space is converted (maximum demolition) to new SCIF space.

5. When a TSCM inspection is not conducted, a mitigation strategy based on a physical security inspection that identifies preventative and corrective countermeasures shall be developed to address any technical security concerns.

K. Interim Accreditations

1. Upon completion of a successful inspection, the respective agency's AO may issue an Interim Accreditation pending receipt of required documentation.

2. If documentation is complete, AOs may issue an Interim Accreditation pending the final inspection.

Chapter 6. Temporary, Airborne, and Shipboard SCIFs

A. Applicability

1. General Information

a) This chapter covers all SCIFs designed to be temporary or such as those at sites for contingency operations, emergency operations, and tactical military operations.

b) These standards apply to the following:

(1) All ground-based temporary SCIFs (T-SCIFs), including those on mobile platforms (e.g., trucks and trailers).

(2) SCIFs aboard aircraft.

(3) SCIFs aboard surface and sub-surface vessels.

c) When employing T-SCIFs, a risk management approach shall be used that balances the operational mission and the protection of SCI.

2. Accreditation

a) Accreditation for the use of T-SCIFs shall not exceed one year without mission justification and approval by the AO.

b) When the T-SCIF owner determines that a T-SCIF is no longer required, the withdrawal of accreditation shall be initiated by the SSO/Contractor Special Security Officer (CSSO).

(1) Upon notification, the AO will issue appropriate SCI withdrawal correspondence.

(2) The AO or appointed representative will conduct a close-out inspection of the facility to ensure that all SCI material has been removed.

B. Ground-Based T-SCIFs

1. T-SCIF Structures and Activation

a) Ground-based T-SCIFs may be established in hardened structures (e.g., buildings, bunkers) or semi-permanent structures (e.g., truck-mounted or towed military shelters, prefabricated buildings, tents).

b) Permanent-type hardened structures shall be used to the greatest extent possible for T-SCIFs.

c) Prior to T-SCIF activation, the AO may require submission of a standard fixed facility checklist or a T-SCIF checklist produced before or after a deployment.

2. SCI Storage and Destruction

a) Under field or combat conditions, open storage of SCI media and materials requires a continuous presence by SCI-indoctrinated personnel.

b) Under field or combat conditions every effort shall be made to obtain from any available host command necessary support for the storage and protection of SCI (e.g., security containers, generators, guards, weapons, etc.).

c) The quantity of SCI material within a T-SCIF shall be limited, to the extent possible, to an amount consistent with operational needs.

d) All SCI shall be stored in GSA-approved security containers.

e) The AO may approve exceptions to the storage of SCI material in GSA-approved storage containers for a specified period of time.

f) When no longer needed, SCI material shall be destroyed by means approved by the AO.

3. Security Requirements

a) T-SCIF security features shall provide acoustical, visual, and surreptitious entry protection.

b) A TSCM inspection shall be requested for any structure proposed for T-SCIF use if the space was previously occupied by a non-U.S. element. It is the AO's responsibility to evaluate operating the SCIF prior to TSCM inspection and formally assume all risk associated with early operation.

c) When possible, T-SCIFs shall be established within the perimeters of U.S.-controlled areas or compounds.

d) If a U.S.-controlled area or compound is not available, the T-SCIF shall be located within an area that affords the greatest degree of protection against surreptitious or forced entry.

e) When a T-SCIF is in operation, the perimeter of its immediate area shall be observed and protected by U.S. guards with U.S. SECRET clearances. Guards shall be equipped with emergency communication devices and, if necessary, with weapons.

f) During non-operational hours, the T-SCIF shall be provided security protection in accordance with AO guidelines.

g) The T-SCIF shall have only one entrance which shall be controlled during hours of operation by an SCI-indoctrinated person using an access roster.

h) Unclassified telecommunications equipment shall meet the requirements outlined in Chapter 10 to the greatest extent practical.

i) Telephones obtained in a foreign country shall not be used within a T-SCIF.

j) Cables and wires penetrating the T-SCIF perimeter shall be protected. The AO may require inspections and routing of cables and wiring through protective distribution systems or may require other countermeasures.

k) AO-approved emergency destruction and evacuation plans shall be developed and rehearsed periodically by all personnel assigned to the T-SCIF; the results of the rehearsal drills shall be documented.

l) When in transit, ground-based and mobile (e.g., truck-mounted, towed military shelters) T-SCIFs containing unsecured and non-encrypted SCI shall be accompanied by a U.S. TOP SECRET-cleared individual with SCI access approval(s).

m) During movement, T-SCIF structures shall be secured with GSA-approved locking devices and equipped with tamper-evident seals.

n) When in transit, hardened T-SCIFs having no open storage of SCI may be monitored by a U.S SECRET-cleared individual.

o) Hardened T-SCIFs shall be designed with TEMPEST countermeasures as identified by the CTTA. The AO, in collaboration with the CTTA, shall provide red/black separation and "protected distribution" guidance for field installation in accordance with NSTISSAM TEMPEST 2/95 and 2/95A and CNSSI 7003.

p) When a T-SCIF is no longer required, the responsible SCI security official shall conduct a thorough facility inspection to ensure all SCI material has been removed.

C. Permanent and Tactical SCIFS Aboard Aircraft

1. The Aircraft Facility Checklist (see Forms & Plans) will be used for permanent SCIFs aboard aircraft.

2. The AO may determine that an Aircraft Facility Checklist may not be required for tactical SCIFs aboard aircraft if the following information is provided:

a) Name of aircraft (tail number)/airborne T-SCIF.

b) Major command/organization.

c) ID number of parent SCIF, if applicable.

d) Location T-SCIF deployed from and date of deployment.

e) Location T-SCIF deployed to and date of deployment.

f) SCI compartment(s) involved in T-SCIF operations.

g) Time period for T-SCIF operations.

h) Name of exercise or operation.

i) Points of contact (responsible officers).

j) Type of aircraft and area to be accredited as a T-SCIF.

k) Description of security measures for entire period of T-SCIF use (standard operating procedures).

l) Additional comments to add clarification.

3. Security Requirements for Aircraft when Operating in Support of Missions Involving SCI Material

a) SCIF location shall be identified by aircraft tail number.

b) Access to the aircraft interior shall be controlled at all times by SCI-indoctrinated personnel.

c) There are no unique physical security construction standards for SCIFs aboard aircraft.

d) Accreditation, such as that from the Defense Courier Service, is not required for aircraft used solely to transport SCI material between airfields.

e) When all personnel on an aircraft are not briefed on every SCI compartment aboard, procedural methods or physical barriers shall be employed to isolate compartments of the SCI.

f) When an aircraft T-SCIF is no longer required, the responsible SCI security official shall conduct an inspection of the aircraft to ensure all SCI material has been removed.

4. SCI Storage and Destruction

a) SCI materials shall be encrypted or secured in an AO-approved security container.

b) When no longer needed, SCI materials shall be destroyed by means approved by the AO.

c) Following an unscheduled landing in U.S.-controlled or non-hostile territory, the senior SCI-indoctrinated person shall retain control of the SCI material until approved storage arrangements can be effected through a local Special Security Officer or SCI-indoctrinated official.

d) Prior to an unscheduled landing in unfriendly or hostile territory, every reasonable effort shall be made to destroy unencrypted SCI material and communications security equipment in accordance with the emergency destruction plan.

e) If the aircraft is stationary, in the absence of SCI-indoctrinated personnel, all SCI information shall be encrypted or removed and stored in an alternative accredited SCIF or location approved by the AO.

f) Emergency destruction plans for SCI material shall be developed, approved by the AO, and rehearsed periodically by all personnel assigned to the aircraft; rehearsal results shall be documented.

5. Additional Security Requirements for Stationary Aircraft

a) The aircraft shall be parked within a controlled area that affords the greatest protection against surreptitious or forced entry.

b) In the absence of SCI-indoctrinated personnel, all SCI information shall be encrypted or removed and stored in an alternative accredited SCIF or location approved by the AO.

c) If the aircraft cannot be positioned within a U.S.-controlled area, the SCI is not encrypted, and removal of the SCI is not possible, then the following measures must be taken:

(1) SCI-indoctrinated personnel shall remain with the aircraft.

(2) A guard force that can control the perimeter of the aircraft shall be deployed, unless infeasible. The guards shall possess U.S. SECRET clearances and be armed and equipped with emergency communication devices.

d) If the aircraft is located within a U.S.-controlled area, the SCI is not encrypted, and removal of SCI is not possible then, the following measures shall be taken:

(1) The AO may mitigate the requirement for SCI-indoctrinated personnel provided the aircraft is equipped with, or stored within a structure equipped with, an intrusion detection system approved by the AO.

(2) All aircraft hatches and doors shall be secured with AO-approved locks and tamper-evident seals.

(3) A guard force must be available to respond to an alarm within five minutes.

(4) Guards shall possess U.S. SECRET clearances and be armed and equipped with emergency communication devices.

(5) If a cleared U.S. guard force is not available, the AO may approve other mitigation measures.

D. Permanent and Tactical SCIFs on Surface or Subsurface Vessels

1. Permanent shipboard SCIFs shall consist of any area aboard a vessel where SCI is processed, stored, or discussed.

2. The Shipboard Checklist (see Forms & Plans) will be used for permanent SCIFs. The AO may determine that this checklist may not be required providing the below information is available:

a) Name of vessel/hull number.

b) Major command/organization.

c) ID number of parent SCIF, if applicable.

d) Location SCIF deployed from and date of deployment.

e) Location SCIF deployed to and date of deployment.

f) SCI compartment(s) and sub-compartments involved in SCIF operations.

g) Name of exercise or operation.

h) Points of contact (responsible officers).

i) Description of security measures for entire period of SCIF use (standard operating procedures).

j) Additional comments to add clarification.

3. Security Requirements for Permanent SCIFs

a) The perimeter (walls, floors, and ceiling) shall be fabricated of structural bulkheads comprised of standard shipboard/submarine construction materials.

b) Elements of the perimeter shall be fully braced and welded or bonded in place.

c) Doors shall conform to the following requirements:

(1) Perimeter doors and emergency exit(s) shall be constructed of standard shipboard materials and shall be mounted in a frame, braced and welded or bonded in place in a manner commensurate with the structural characteristics of the bulkhead, deck, or overhead.

(2) The primary entry door shall be equipped with a GSA-approved combination lock and an access control device.

(3) If the door is in a bulkhead that is part of an airtight perimeter, the airtight integrity may be maintained by co-locating the door with the metal joiner door, or by adding a vestibule.

(4) Metal joiner doors shall be equipped with a combination lock that meets specification FF-L-2740A and with an access control device approved by the AO.

(5) Doors shall be constructed in a manner that will preclude unauthorized removal of hinge pins and anchor bolts, and obstruct access to lock-in bolts between the door and frame.

(6) Doorways or similar openings that allow visual access to the SCIF shall be screened or curtained.

d) No damage control fittings or cables shall be located within, or pass through, the SCIF. This does not apply to smoke dampers or other life-safety devices that are operated by personnel within the space during working hours.

e) Removable hatches and deck plates less than 10 square feet that are secured by exposed nuts and bolts (external to the SCIF) shall be secured with a high security padlock (unless their weight makes this unreasonable). Padlock keys shall be stored in a security container located within the SCIF.

f) Vents, ducts, and similar openings with a cross-sectional measurement greater than 96 inches shall be protected by a fixed barrier or security grill. (This requirement is not applicable to through-ducts that do not open into the SCIF.)

(1) Grills shall be fabricated of steel or aluminum grating or bars with a thickness equal to the perimeter barrier.

(2) If a grating is used, bridge center-to-center measurements will not exceed 1.5 inches by 4 inches.

(3) Bars shall be mounted in a grid pattern, six-inches on center.

(4) The grating or bars shall be welded into place.

g) Construction of the SCIF perimeter shall afford adequate sound attenuation. Air handling units and ducts may require baffles if SCIF discussions can be overhead in adjacent areas.

h) The SCIF shall be equipped with an AO-approved intrusion detection system (IDS) or other countermeasures if SCI-indoctrinated personnel cannot continuously occupy the area.

i) Passing scuttles and windows should not be installed between the SCIF and any other space on the ship. If installed, they shall be secured on the inside of the SCIF.

j) All SCI cryptographic and processing equipment shall be located within the SCIF.

k) Unclassified telecommunications shall meet the requirements outlined in Chapter 11, to the greatest extent practical.

l) Sound-powered telephones will not be permitted in the SCIF without additional mitigations determined by the AO. If a deviation is granted, sound-powered telephones located within the SCIF and connecting to locations outside the SCIF shall comply with the following:

(1) Telephone cables shall not break out to jack-boxes, switchboards, or telephone sets other than at designated stations. Cables shall not be shared with any circuit other than call or signal systems associated with the SCIF circuit.

(2) Telephone cables shall be equipped with a selector switch located at the controlling station and shall be capable of disconnecting all stations, selecting any one station, and disconnecting the remaining stations.

(3) Sound-powered telephones not equipped with a selector switch shall have a positive disconnect device attached to the telephone circuit.

(4) Within any SCIF, sound-powered telephones not used for passing SCI information shall have a warning sign prominently affixed indicating the restriction.

(5) A call or signal system shall be provided. Call signal station, type ID/D, shall provide an in-line disconnect to prevent a loudspeaker from functioning as a microphone.

m) The approval of the AO is required for unencrypted, internal, communication-announcing systems that pass through the SCIF perimeter.

n) Intercommunications-type announcing systems installed within an SCIF shall meet the following standards:

(1) The system shall operate only in the push-to-talk mode.

(2) Receive elements shall be equipped with a local buffer amplifier to prevent loudspeakers or earphones from functioning as microphones.

(3) Except as specified, radio transmission capability for plain radio-telephone (excluding secure voice) will not be connected.

(4) Cable conductors assigned to the transmission of plain language radio-telephone will be connected to ground at each end of the cable.

(5) A warning sign will be posted that indicates the system may not be used to pass SCI.

(6) Unencrypted internal communication systems that pass through the SCIF perimeter shall be in grounded ferrous conduit.

o) Commercial intercommunication equipment shall not be installed within a SCIF without prior AO approval.

p) Loudspeakers used on general announcing systems shall be equipped with a one-way buffer amplifier to protect against microphonic responses.

q) Pneumatic tube systems shall not be installed within the SCIF. The following safeguards apply to existing systems on older ships:

(1) Covers shall be locked at both ends with an AO-approved lock. Keys shall be stored within an approved security container within the SCIF.

(2) The system shall have the capability to maintain the pressure or vacuum and the capability to lock in the secure position at the initiating end.

(3) There shall be a direct voice communications link between both ends to confirm the transportation and receipt of passing cartridges.

(4) Cartridges passing SCI material shall have a distinctive color.

(5) Pneumatic tubes shall be visually inspectable along their entire length.

(6) The CTTA shall conduct a TEMPEST countermeasures inspection and shall recommend safeguards to limit compromising emanations. TEMPEST safeguards should be pre-engineered into platforms to the greatest extent possible.

4. General Requirements for T-SCIFs

   a) SCIFs on sub-surface vessels shall be accredited as T-SCIFs.

   b) T-SCIFs aboard a vessel include portable platforms or containers temporarily placed within ship space such as embarked Portable Shipboard Collection Vans.

   c) T-SCIFs shall be occupied by an SCI-indoctrinated person at all times unless the facility is protected by a GSA-approved lock, an approved intrusion detection system, and a response capability or other countermeasures approved by the AO.

5. Security Requirements for T-SCIFs

   a) Overall T-SCIF construction standards shall be the same as those used for permanent shipboard SCIFs.

   b) Vents, ducts, and similar openings shall be constructed to the same standards as those used for a shipboard SCIF.

   c) SCI materials shall be destroyed by means approved by the AO when no longer needed.

   d) AO-approved emergency destruction plans shall be rehearsed periodically by all personnel assigned to the T-SCIF and the rehearsals documented.

   e) Unclassified telecommunications shall meet the requirements for a shipboard SCIF, to the greatest extent practical.

   f) When the T-SCIF is no longer required, the responsible SCI security official shall conduct a closing inspection of the T-SCIF to ensure all SCI material has been removed.

   g) The CTTA shall conduct a TEMPEST countermeasures inspection and shall recommend safeguards to limit compromising emanations. TEMPEST safeguards should be pre-engineered into platforms to the greatest extent possible.

6. Additional Security Standards for Mobile Platforms or Containers

   a) Construction of the perimeter must be of sufficient strength to reveal evidence of physical penetration (except for required antenna cables and power lines).

   b) Doors must fit securely and be equipped with a locking device that can be locked from the inside and outside.

7. SCI Storage and Destruction

   a) SCI material shall be stored in a GSA-approved security container that is welded or otherwise permanently secured to the structural deck.

   b) When no longer needed, SCI materials shall be destroyed by means approved by the AO.

c) AO-approved emergency destruction and evacuation plans shall be developed and rehearsed periodically by all personnel assigned to the SCIF and the rehearsals shall be documented.

Chapter 7. Intrusion Detection Systems (IDS)

A. Specifications and Implementation Requirements

1. General SCIF IDS Requirements

   a) SCIFs shall be protected by IDS when not occupied.

   b) Interior areas of a SCIF through which reasonable access could be gained, including walls common to areas not protected at the SCI level, shall be protected by IDS.

   c) Doors without access control systems and that are not under constant visual observation shall be continuously monitored by the IDS.

   d) If any component of the IDS is disrupted to the extent the system no longer provides essential monitoring service (e.g., loss of line security, inoperable IDE, and loss of power), SCI-indoctrinated personnel shall physically occupy the SCIF until the system is returned to normal operation. As an alternative, the outside SCIF perimeter may be continuously monitored by a response or guard force.

   e) IDS failure shall be addressed in the SCIF emergency plan.

2. System Requirements

   a) IDS installation related components and monitoring stations shall comply with Underwriters Laboratories (UL) Standard for National Industrial Security Systems for the Protection of Classified Material, UL 2050.

   b) Installation shall comply with an Extent 3 installation as referenced in UL 2050.

   c) Systems developed and used exclusively by the USG do not require UL certification but shall comply with an Extent 3 installation as referenced in UL 2050.

   d) Interior areas of a SCIF through which reasonable access could be gained, including walls common to areas not protected at the SCI level, shall be protected by IDS consisting of motion sensors and high security switches (HSS) that meet UL 634 level 1 or 2 requirements, and/or other AO-approved equivalent sensors. HSS Level 2 is preferred.

   e) IDS-associated cabling that extends beyond the SCIF perimeter shall be installed in rigid conduit or shall employ line security.

   f) The IDS shall be independent of systems safeguarding other facilities.

   g) If a monitoring station is responsible for more than one IDS, there shall be an audible and visible annunciation for each IDS.

   h) IDS's shall be separate from, and independent of, fire, smoke, radon, water, and other systems.

i) If the IDS incorporates an access control system (ACS), notifications from the ACS shall be subordinate in priority to IDS alarms.

j) System key variables and passwords shall be protected and restricted to U.S. SCI-indoctrinated personnel.

k) IDS installation plans shall be controlled as determined by the AO.

l) Systems shall not include audio or video monitoring without the application of appropriate countermeasures and AO approval. Systems containing auto-reset features shall have this feature disabled.

m) The AO shall approve all system plans. Final system acceptance testing shall be included as part of the SCIF accreditation package.

n) False alarms shall not exceed one alarm per 30-day period per zone. False alarms are any alarm signal transmitted in the absence of a confirmed intrusion that is caused by changes in the environment, equipment malfunction, or electrical disturbances. If false alarms exceed this requirement, a technical evaluation of the system shall be conducted to determine the cause, repaired or resolved, and documented.

3. System Components

a) Sensors

(1) All system sensors shall be located within the SCIF.

(2) With AO approval, sensors external to the SCIF perimeter and any perimeter equipment used may be connected to the IDS provided the lines are installed on a separate zone and routed within grounded conduit.

(3) Failed sensors shall cause immediate and continuous alarm activation until the failure is investigated and corrected.

(4) Dual technology sensors are authorized when each technology transmits alarm conditions independent of the other technology.

(5) A sufficient number of motion detection sensors shall be installed to meet the requirements of paragraph A.2.d, shall be UL 639 listed, or shall be approved by the AO. However, the following special circumstances apply to motion detection sensors:

- Motion detection sensors are not required above false ceilings or below false floors.
- For facilities outside the U.S. and in Category I and II countries, motion detections sensors above false ceilings or below false floors may be required by the AO.

(6) When the primary entrance door employs a delay to allow for changing the system mode of access, the delay shall not exceed 30 seconds.

(7) SCIF perimeter doors shall be protected by an HSS and a motion detection sensor.

(8) Emergency exit doors shall be alarmed and monitored 24 hours per day.

b) Premise Control Units (PCUs)

(1) PCUs shall be located within a SCIF and only SCIF personnel may initiate changes in access modes.

(2) Operation of the access/secure switch shall be restricted by using a device or procedure that validates authorized use.

(3) Cabling between all sensors and the PCU shall be dedicated to the system, contained within the SCIF, and shall comply with national and local electric codes and Committee for National Security Systems (CNSS) standards. If the wiring cannot be contained within the SCIF, such cabling shall meet the requirements for External Transmission Line Security 3.b.(10) below.

(4) Alarm status shall be continuously displayed with an alphanumeric display at the PCU and/or monitoring station.

(5) Every effort shall be made to design and install the alarm-monitoring panel in a location that prevents observation by unauthorized persons.

(6) The monitoring station or PCU shall identify and display activated sensors.

(7) Immediate and continuous alarm annunciations shall occur for the following conditions.

- Intrusion Detection
- Failed Sensor
- Tamper Detection
- Maintenance Mode (a maintenance message may display in place of an alarm)
- Zones that are shunted or masked during maintenance mode

(8) Failed/changed power status shall be indicated at the PCU and/or monitoring station.

(9) An IDS with an auto-alarm reset feature shall have it disabled. All system events shall be reset by authorized SCI-indoctrinated personnel after an inspection of the SCIF and a determination for the cause of the alarm has been made.

(10) If any IDS transmission line leaves a SCIF, National Institute of Standards and Technology, Federal Information Processing Standards (FIPS) 140-2 certified encrypted lines shall be employed and so indicated in the UL 2050 Certificate. Alternative methods shall be approved by the AO.

c) Integrated IDS.

(1) The IC element's Chief Information Officer (CIO) shall be consulted before connecting an IDS to a government LAN or WAN under their cognizance.

(2) In cases where the IDS has been integrated into a networked system (local area network (LAN) or wide area network (WAN)), the requirements below shall be met.

- If any component of the IDS is remotely programmable, a Network Intrusion Detection Systems (NIDS) is required.
- System application software shall be installed on a host computer dedicated to security systems. The host computer shall be located in an alarmed area controlled at the SECRET or higher level.
- All system components and equipment shall be isolated with dedicated firewalls, or similar enhancements, that are configured to allow data transfers only between the PCU and monitoring station.
- A secondary communication path may be utilized to augment an existing data communication link to reduce investigations of data communication failures of less than five minute duration. The supervision provided by the secondary communication path shall be equivalent to that of the primary communication path.
- A unique user ID and password is required for each individual granted access to the system host computer. Passwords shall be a minimum of twelve characters consisting of alpha, numeric, and special characters, and shall be changed every six months.
- Firewalls shall be monitored for unauthorized access attempts, and all access attempts and changes to the system network shall be logged.
- Network administrators shall immediately notify the AO or designee of any unauthorized modifications.
- The IDS network system administrator shall be a U.S. citizen and SCI-indoctrinated.
- All transmissions of system information over the LAN/WAN shall be encrypted using National Institute of Standards and Technology FIPS140-2 certified encrypted lines.
- Remote networked system terminals shall:
  - Ensure that non SCI-indoctrinated personnel with access to the remote terminal cannot modify the IDS or ACS.
  - Require an independent user ID and password in addition to the host login requirements.

- Have system auditing software that shall log and monitor failed logins and IDS/ACS application program modifications.

B. IDS Modes of Operation

1. General Information

   a) The system shall operate in either access or secure mode.

   b) There shall be no remote capability for changing the mode of operation or accessing the status of the system unless SCIF personnel conduct a daily audit of all openings and closings.

   c) Changing access/secure status of the system shall be limited to SCI-indoctrinated personnel.

2. Requirements for Access Mode

   a) When in access mode, normal authorized entry into the SCIF, in accordance with prescribed security procedures, shall not cause an alarm.

   b) Tamper circuits and emergency exit door circuits shall remain in the secure mode of operation.

   c) The PCU shall have the ability to allow alarm points to remain in secure status while other points are in access status.

3. Requirements for Secure Mode

   a) The system shall be placed into secure mode when the last person departs the SCIF.

   b) A record shall be maintained identifying the person responsible for activating and deactivating the system.

   c) Each failure to activate or deactivate the system shall be reported to the responsible SCIF Security Manager. Records of these events shall be maintained for two years.

   d) When in the secure mode, any unauthorized entry into the SCIF shall cause an alarm to be immediately transmitted to the monitoring station.

4. Requirements for Maintenance and Zone Shunting/Masking Modes

   a) When maintenance is performed on a system, a signal for this condition shall be automatically sent to the monitoring station.

   b) When a zone or sensor is shunted for reasons other than maintenance, the shunted or masked zone sensor shall be displayed as such at the monitoring station or PCU throughout the period the condition exists.

   c) Any sensor that has been shunted shall be reactivated upon the next change in status from access to secure.

d) All maintenance periods shall be archived in the system.

e) The AO may require that a Personal Identification Number (PIN), for maintenance purposes, be established and controlled by SCI-indoctrinated personnel.

f) A shunted or masked zone or sensor shall be displayed as such at the monitoring station or PCU throughout the period the condition exists unless it occurs during a maintenance period.

g) Computing devices are allowed attachment to system equipment either temporarily or permanently for the purposes of system maintenance or repair.

(1) Such devices shall be kept under control of SCI-indoctrinated personnel at all times.

(2) When not in use, the computing devices shall be secured within the SCIF.

(3) Mass storage devices containing SCIF alarm equipment details, configurations, or event data will be protected at an appropriate level approved by the AO.

h) After the initial installation, the capability for remote diagnostics, maintenance, or programming of IDE shall not exist unless accomplished only by appropriately SCI-indoctrinated personnel and shall be appropriately logged or recorded in the Remote Service Mode Archive. A self-test feature shall be limited to one second per occurrence.

5. Requirements for Electrical Power

a) In the event of primary power failure, the system shall automatically transfer to an emergency electrical power source without causing alarm activation.

b) Twenty-four hours of uninterruptible backup power is required and shall be provided by an uninterruptible power supply (UPS), batteries, or generators, or any combination.

c) An audible or visual indicator at the PCU shall provide an indication of the primary or backup electrical power source in use.

d) Equipment at the monitoring station shall visibly and audibly indicate a failure in a power source or a change in power source. The individual system that failed or changed shall be indicated at the PCU or monitoring station as directed by the AO.

6. Monitoring Stations

a) Monitoring stations shall be government-managed or one of the following in accordance with UL 2050:

(1) CSA-operated monitoring station.

(2) Government contractor monitoring station (formerly called a proprietary central station).

(3) National industrial monitoring station.

(4) Cleared commercial central station (see NISPOM).

b) Monitoring station employees shall be eligible to hold a U.S. SECRET clearance.

c) Monitoring station operators shall be trained in system theory and operation to effectively interpret system incidents and take appropriate response action.

d) Records shall be maintained for two years and indicate the following:

- Time of receipt of alarm.
- Name(s) of security or response force personnel.
- Dispatch time.
- Arrival time of responding personnel.
- Nature of the alarm.
- Follow-up actions that were taken.

C. Operations and Maintenance of IDS

1. Alarm Response

a) Alarm activations shall be considered an unauthorized entry until resolved.

b) The response force shall take appropriate steps to safeguard the SCIF, as permitted by a written support agreement, until an SCI-indoctrinated individual arrives to take control of the situation.

2. System Maintenance

a) Maintenance and repair personnel shall be escorted if they are not TOP SECRET-cleared and indoctrinated for SCIF access.

b) Repairs shall be initiated within four hours of receipt of an alarm.

c) The SCIF shall be continuously manned by SCI-indoctrinated personnel on a 24-hour basis until repairs are completed.

d) The following apply to emergency-power battery maintenance:

(1) The battery manufacturer's periodic maintenance schedule and procedures shall be followed and documented in the system's maintenance logs and retained for two years.

(2) If the communications path is via a network, the local uninterruptible power source for the network shall also be tested.

(3) Batteries shall be tested, under load, until 50% of their capacity has been expended.

(4) If a generator is used to provide emergency power, the manufacturers recommended maintenance and testing procedures shall be followed.

e) Network Maintenance

(1) NIDS system administrators shall maintain configuration control, ensure the latest operating system security patches have been applied, and configure the operating system to provide a high level of security.

(2) Inside the U.S., network maintenance personnel within a SCIF shall be a U.S. person and be escorted by cleared SCIF individuals.

(3) Outside the U.S., network maintenance personnel shall be U.S. TOP SECRET-cleared or U.S. SECRET-cleared and escorted by SCIF personnel.

D. Installation and Testing of IDS

1. Personnel Requirements

a) Installation and testing within the U.S. shall be performed by U.S. companies using U.S. citizens.

b) Installation and testing outside of the U.S. shall be performed by personnel who are U.S. TOP SECRET-cleared or U.S. SECRET-cleared and escorted by SCIF personnel.

2. Installation Requirements

All system components and elements shall be installed in accordance with requirements of this document, UL 2050, and manufacturer's instructions and standards.

3. Testing

a) Acceptance testing shall be conducted on systems prior to operational use to provide assurance that they meet all requirements of this section prior to SCIF accreditation.

b) Semi-annual IDS testing shall be conducted to ensure continued performance.

c) Records of testing and test performance shall be maintained in accordance with documentation requirements.

d) Motion Detection Sensor Testing

All motion detection sensors shall be tested to ensure activation of the sensor at a minimum of four consecutive steps at a rate of one step per second; that is, 30 inches ± 3 inches or 760 mm ± 80 mm per second. The four-step movement shall constitute a "trial."

(1) The test shall be conducted by taking a four-step trial, stopping for three to five seconds, and taking another four-step trial.

(2) Trials shall be repeated throughout the SCIF and from different directions.

(3) An alarm shall activate at least three out of every four consecutive trials made by moving progressively through the SCIF.

e) HSS Testing

All HSS devices shall be tested to ensure that an alarm signal activates before the non-hinged side of the door opens beyond the thickness of the door from the closed position, e.g., the sensor initiates before the door opens 1¾ inch for a 1¾ inch door.

f) Tamper Testing

Each IDS equipment cover shall be individually removed or opened to ensure there is alarm activation at the PCU or monitoring station in both the secure and access modes.

(1) Tamper detection devices need only be tested when installed.

(2) The AO may require more frequent testing of tamper circuits.

Chapter 8. Access Control Systems (ACS)

A. SCIF Access Control

1. Guidelines

a) SCIFs shall be controlled by SCI-indoctrinated personnel or by an AO- approved ACS to ensure access is restricted to authorized personnel.

b) Personnel access control shall be utilized at all SCIFs.

c) Visual recognition of persons entering the SCIF by an SCI-indoctrinated person at the entrance to a SCIF is the ideal access control.

d) Entrances where visitor control is conducted shall be under continuous visual observation unless the SCIF is properly secured.

e) When the SCIF is an entire building, access control shall occur at the building perimeter.

2. ACS Requirements if Continuous Visual Observation is Not Possible

a) An automated personnel ACS that verifies an individual's identity before the individual is permitted unescorted access shall be utilized when personal recognition and verification is not used. Automated verification shall employ **two** of the following three technologies:

(1) Identification (ID) badge or card used in conjunction with the access control device that validates the identity of the person to whom the card is issued. Compromised or lost access cards shall be reported immediately and updated in the system to reflect "no access."

(2) A personal identification number (PIN) that is entered into the keypad by each individual. The PIN shall consist of four or more random digits, with no known or logical association to the individual or which can be derived from the person or system generated. Compromised PINs shall be reported immediately to the facility Security Officer (SO) or SCIF SO and updated in the system to reflect "no access."

(3) Biometric personal identity verification using unique personal characteristics such as fingerprint, iris scan, palm print, etc.

b) The automated personnel ACS shall ensure that the probability of an unauthorized individual gaining access is no more than one in ten thousand while the probability of an authorized individual being rejected access is no more than one in one thousand. Manufacturers must certify in writing that their system meets these criteria.

B. ACS Administration

1. ACS administrators shall be SCI-indoctrinated.

2. Remote release buttons that by-pass the ACS shall be inside the SCIF and in a location that provides continuous visual observation of personnel entering the SCIF.

3. ACSs shall not be used to secure an unoccupied SCIF.

4. When not occupied, SCIFs shall be alarmed and in secure mode in accordance with Chapter 7 and secured with an approved GSA FF-L-2740A combination lock.

5. Authorized personnel who permit another individual to enter the SCIF shall verify the individual's authorized access.

6. SCIF access authorization shall be removed when the individual is transferred, terminated, or the access approval is suspended or revoked.

C. ACS Physical Protection

1. Card readers, keypads, communication interface devices, and other access control equipment located outside the SCIF shall be tamper-protected and be securely fastened to a wall or other fixed structure.

2. Electrical components, associated wiring, or mechanical links shall be accessible only from inside the SCIF.

3. System data that is carried on transmission lines (e.g., access authorizations, personal identification, or verification data) to and from equipment located outside the SCIF shall be protected using FIPS 140-2 certified encrypted lines. If this communication technology is not feasible, transmission lines shall be installed as approved by the AO.

4. Equipment containing access-control software programs shall be located in the SCIF or a SECRET controlled area.

5. Electric door strikes installed in conjunction with a personnel ACS shall have a positive engagement and be approved under UL 1034 for burglar resistance.

D. ACS Recordkeeping

1. Records shall reflect the active assignment of ID badge/card, PIN, level of access, entries, and similar system-related information.

2. Records and information concerning encoded ID data, PINs, Authentication data, operating system software, or any other data associated with the personnel ACS shall be secured in an open-storage facility or, when unattended, secured in a GSA-approved container in a closed-storage facility. Access to such data shall be restricted to only SCI-indoctrinated personnel responsible for the access control system.

3. Records of personnel removed from the system shall be retained for two years from the date of removal.

4. Records of security incidents (violations/infractions) regarding ACS shall be retained by the SO for five years from the date of an incident or until investigations of system violations and incidents have been resolved.

E. Using Closed Circuit Television (CCTV) to Supplement ACS

1. CCTV may be used to supplement the monitoring of a SCIF entrance for remote control of the door from within the SCIF. The system shall present no technical security hazard.

2. The remote control device shall be within the interior of the SCIF.

3. The system shall provide a clear view of the SCIF entrance and shall be monitored/operated by SCI-indoctrinated personnel within the SCIF.

4. CCTV communication lines should be located within the SCIF. Communication lines that must run external to the SCIF shall be installed to prevent tampering as approved by the AO.

F. Non-Automated Access Control

1. Non-automated access control devices (mechanical, electric, or electromechanical) may be approved by the AO to control access to SCIFs where the number of personnel that require access is low and there is only one entrance.

2. Combinations shall consist of four (4) or more random digits.

3. The use of pass keys to bypass such devices should be avoided except when local fire/safety codes require them. Any pass keys for such devices must be strictly controlled by SCI-indoctrinated personnel.

4. Mechanical access control devices (e.g., UNICAN, Simplex) shall be installed to prevent manipulation or access to coding mechanisms from outside the door.

5. The following shall apply to electric or electromechanical access control devices:

   a) The control panel or keypad shall be installed in such a manner to preclude unauthorized observation of the combination or the actions of a combination change.

   b) The selection and setting of combinations shall be accomplished by the SO and shall be changed when compromised or deemed necessary by the SO.

   c) The control panel in which the combination and all associated cabling and wiring is set shall be located inside the SCIF and shall have sufficient physical security to deny unauthorized access to its mechanism.

Chapter 9. Acoustic Protection

A. Overview

1. This establishes DNI guidelines to protect classified conversations from being inadvertently overheard outside a SCIF.

2. This is not intended to protect against deliberate technical interception of audio emanations.

B. Sound Group Ratings

The ability of a SCIF structure to retain sound within the perimeter is rated using a descriptive value, the Sound Transmission Class (STC). To satisfy the normal security standards of SCIFs, the following transmission attenuation groups have been established:

- Sound Group 3 - STC 45 or better. Loud speech from within the SCIF can be faintly heard but not understood outside of the SCIF. Normal speech is unintelligible with the unaided human ear.
- Sound Group 4 - STC 50 or better. Very loud sounds within the SCIF, such as loud singing, brass music, or a radio at full volume, can be heard with the human ear faintly or not at all outside of the SCIF.

C. Acoustic Testing

1. Audio tests shall be conducted to verify standards are met. Tests may be instrumental or non-instrumental as approved by the AO. Test method used shall be detailed in the CSP.

2. Instrumental Acoustic Tests

a) Only those with training on audio testing techniques shall conduct instrumental acoustic tests

b) With all SCIF doors closed, all perimeter walls and openings (e.g., air returns, doors, windows, etc.) shall be tested along multiple points to ensure that either Sound Group 3 or 4 is met.

c) Audio test sources shall have a variable sound level output.

d) The output frequency range shall include normal speech.

e) Test speakers shall be placed six feet from the test wall and 4 feet off the floor.

f) Audio gain of the test source shall produce “loud or very loud speech” as defined by Sound Group 3 and 4 levels respectively.

g) As an alternative, instrumented testing may be performed to Noise Isolation Class (NIC) standards. Results shall comply with NIC 40 for Sound Group 3 and NIC 45 for Sound Group 4.

3. Non-Instrumental Acoustic Tests

All non-instrumental tests shall be approved by the AO.

D. Construction Guidance for Acoustic Protection

1. The SCIF perimeter shall be designed and constructed to meet Sound Group 3 or better standards. (See construction drawings for Wall A, B, or C.)

2. Areas that provide for amplified conversations, such as conference centers, video teleconference (VTC) rooms, or similar areas, shall be designed and constructed to meet Sound Group 4 standards. (See construction drawings for Wall A, B, or C.)

3. Utility (e.g., power, signal, telephone) distribution shall be surface mounted to a sound-treated wall and shall not completely penetrate the sound-engineered structure.

E. Sound Transmission Mitigations

1. Construction of walls as described in Chapter 3 (Wall types A, B and C) or with brick, concrete, or other substantive material and acoustically treating penetrations, walls and doors should provide the necessary acoustic protection for Sound group 3.

2. When Sound Group 3 or 4 cannot be met with normal construction, supplemental mitigations to protect classified discussions from being overheard by unauthorized persons may include but not be limited to the following:

a) Structural enhancements such as the use of high-density building materials (i.e., sound deadening materials) can be used to increase the resistance of the perimeter to vibration at audio frequencies.

b) Facility design can include a perimeter location or stand-off distance which prevents non-SCI-indoctrinated person(s) traversing beyond the point where SCI discussions become susceptible to interception. For example, use of a perimeter fence or protective zone between the SCIF perimeter walls and the closest "listening place" is permitted as an alternative to other sound protection measures.

c) Sound masking devices, in conjunction with an amplifier and speakers or transducers, can be used to generate and distribute vibrations or noise; noise sources may be noise generators, tapes, discs, or digital audio players.

d) Speakers/transducers must produce sound at a higher level than the voice conversations within the SCIF.

e) Speakers/transducers shall be placed close to, or mounted on, any paths that would allow audio to leave the area, including doors, windows, common perimeter walls, vents/ducts, and any other means by which voice can leave the SCIF.

f) Wires and transducers shall, to the greatest extent possible, be located within the perimeter of the SCIF.

g) The sound masking system shall be subject to inspection during TSCM evaluations.

h) If the AO determines risk to be low, a speaker may be installed outside the SCIF door if the following conditions are met:

- The cable exiting the SCIF shall be encased within rigid conduit.
- The sound masking system shall be subject to review during TSCM evaluations.

i) For common walls, the speakers/transducers shall be placed so the sound optimizes the acoustical protection.

j) For doors and windows, the speakers/transducers shall be placed close to the aperture of the window or door and the sound projected in a direction facing away from conversations.

k) Once the speakers or transducers are optimally placed, the system volume shall be set and fixed. The volume level for each speaker shall be determined by listening to conversations outside the SCIF or area to be protected, and the speaker volume adjusted until conversations are unintelligible from outside the SCIF.

l) Sound-source generators shall be permanently installed and not contain an AM/FM receiver and shall be located within the SCIF.

m) Any sound-source generator within the SCIF that is equipped with a capability to record ambient sound shall have that capability disabled.

n) Examples of government-owned or government-sponsored sound-source generators are given below:

- Audio amplifier with a standalone computer (no network connection).
- Audio amplifier with a cassette tape player, compact disc (CD) player, or digital audio player, or with a digital audio tape (DAT) playback unit.
- Integrated amplifier and playback unit incorporating any of the above music sources.
- A noise generator or shift noise source generator using either white or pink noise.

Chapter 10. Portable Electronic Devices (PEDs)

A. Approved Use of PEDs in a SCIF

1. Heads of IC elements may institute and maintain mitigation programs (countermeasures) to allow introduction of PEDs into SCIFs under their cognizance. Such decisions are not applicable to facilities under the cognizance of other heads of IC elements.

2. The AO, and when appropriate the information systems (ISs) authorizing official(s), shall collaborate and approve the introduction and use of PEDs into a SCIF.

3. Outside the U.S., heads of intelligence elements may approve PED usage by waiver and include the following:

- Defined mission need for PED usage.
- Defined period of time.
- Statement of residual risk.

4. Within the U.S., if the CSA determines the risk from PEDs to SCI under their cognizance is acceptable, taking a PED into the SCIF may be allowed with the following restrictions:

a) A complete risk assessment addressing each component of risk must be completed.

b) Only PEDs with low risk may be allowed entry to a SCIF.

c) Mitigation shall be applied to PEDs evaluated to be high and medium risk to reduce the PED risk to low before the device may be allowed entry.

d) Assessments may result in a CSA determination to prohibit specific PEDs; any determination shall be applied to all SCIFs under the CSA's cognizance.

5. Government-owned PEDs, with physically disconnected wireless capability, may be approved to process and/or be connected to a government classified or unclassified information system (IS) provided the following apply:

a) Use and storage of the PED is specified in the System Security Plan for the government system to which it is connected.

b) The PED is accredited by the authorizing official for the IS.

6. Contractor-owned and government-sponsored PEDs, with physically disconnected wireless capability, may be approved to process and/or be connected to a government classified or unclassified IS provided the following apply:

a) Use and storage is specified in the System Security Plan for the government system to which it is connected.

b) The PED is accredited by the Authorizing Official for the IS.

c) Use and storage is specified in the appropriate contract(s) to include the government's right to seize if and when necessary.

B. Prohibitions

1. Personally-owned PEDs are prohibited from processing SCI. Connecting personally-owned PEDs to an unclassified IS inside SCIFs may only be done when wireless capability is physically disconnected and has the approval of the AO for the IS.

2. Personally-owned PEDs are prohibited in SCIFs outside the U.S. If the CSA determines that mission requirements dictate a need, government- or contractor-owned PEDs may be permitted in a SCIF by specific exception or if the CSA determines the risk is low.

3. If a PED is transported outside the U.S. and left unattended or physical control is lost, that device shall not be reintroduced into a SCIF.

C. PED Risk Levels

1. General Information

a) Levels of risk are based on the functionality of PEDs.

b) The CSA and appropriate authorizing official for the IS (when a portable IS is involved) will determine risk level and mitigation requirements for devices not addressed.

2. Low-, Medium-, and High-risk PEDs

a) Low-risk PEDs are devices without recording or transmission capabilities and may be allowed into a SCIF by CSAs without mitigation. Low-risk PEDs include, but are not limited to, the following:

- Electronic calculators, spell checkers, language translators, etc.
- Receive-only pagers.
- Audio and video playback devices with volatile storage capability.
- Radios (receive-only).
- Infrared (IR) devices that convey no intelligence data (e.g., text, audio, video, etc.), such as an IR mouse or remote control.

b) Medium-risk PEDs are devices with built-in features that enable recording or transmitting digital text, digital images/video, or audio data; however, these features can be physically disabled. Medium-risk PEDs may be allowed in a SCIF by the CSA with appropriate mitigations. Examples of medium-risk PEDs include, but are not limited to, the following:

- Voice-only cellular telephones.
- Portable ISs, such as personal digital assistants (PDAs), tablet personal computers, etc.

- Devices that may contain or be connected to communications modems
- Devices that have microphones or recording capabilities
- Optical technologies such as infrared (IR) other than those identified in paragraph 10.C.2. above

c) High-risk PEDs are those devices with recording and/or transmitting capabilities that require more extensive or technically complex mitigation measures to reduce the inherent risk or those that cannot be sufficiently mitigated with current technology. The CSA may approve entry and use of government- and contractor-owned PEDs for official business provided mitigation measures are in place that reduces the risk to low. Examples include, but are not limited to, the following:

- Electronic devices with RF transmitting capabilities including wireless devices (WiFi/IEEE 802.11, Bluetooth, etc.).
- Photographic, video, and audio recording devices.
- Multi-function cellular telephones.

D. Risk Mitigation

1. Heads of IC elements shall establish risk mitigation programs if high- or medium-risk PEDs are allowed into SCIFs.

2. Risk mitigation programs shall contain the following elements:

a) Formal approval process for PEDs.

b) Initial and annual refresher training for those individuals with approval to bring PEDs into a SCIF.

c) Device mitigation compliance documents listing the specific PEDs, their permitted use, required mitigations, and residual risk after mitigation.

d) A user agreement that specifies the following:

(1) The USG or a designated representative may seize the PED for physical and forensic examination at the government's discretion.

(2) The USG and the designated representative are not responsible for any damage or loss to a device or information stored on personally-owned PEDs resulting from physical or forensic examination.

3. Risk mitigation programs may include the following elements:

a) Registration of PED serial numbers.

b) PED security training program.

c) Reporting procedures for loss or suspected tampering.

d) Labeling approved PEDs for easy identification.

e) Electronic detection equipment to detect transmitters/cell phones.

4. The following sample table may be used to identify PED capabilities that could be allowed or prohibited, and capabilities that require mitigation and mitigation methods.

PED Sample Table

PED Functionalities	Introduction Permitted	Approval &/or Registration Required	Mitigation Required Prior to Use	PED Use Permitted
Single-function RF receiver (Pager, AM/FM Radio, etc.)[1]	Yes	No	None	Yes
CD Player[2]	Yes	No	None	Yes
Medical devices[3]	Yes	Yes	None	Yes
Infrared (IR) capability	Yes	Yes	Metal Tape[4]	Yes
PEDs with microphone ports	Yes	Yes	Disable wiring or use adapter/erase plug[5]	Yes
MP3 players (without record or RF capability)	Yes	Yes	Yes	Yes
Cell phone[6]	Yes	No	Battery removed[7]	No
RF transmitter[8]	**Prohibited**			**Prohibited**
Wireless transmitting capabilities	**Prohibited**			**Prohibited**
Personally owned laptops	**Prohibited**			**Prohibited**
Any device capable of recording images (photographic, video) or audio including devices connected to memory sticks, thumb drives or flash memory.	**Prohibited**			**Prohibited**
Personally owned PEDs capable of connecting to systems within the SCIF without interface cables or cradles.[9]	**Prohibited**			**Prohibited**

[1] RF Receiver may not have external cabling or contain any internal or external connectivity capabilities.
[2] CD players capable of playing CD, CD-R, CD-RW, and MP3 formats are permitted. Only commercially produced media is allowed. No personally produced CDs are allowed in SCIFs.
[3] Medical devices are exceptions to these requirements.
[4] Metal tape must be a minimum of 3 mils (.003 inch) thick and completely cover the IR port while within SCIF.
[5] Microphone wires must be cut/disabled on non-laptop PEDs. An adapter/erase plug must be inserted into laptop external microphone ports. Any adaptor that is designed for the external microphone port may be used provided that the adapter does not provide any functionality other than disabling the internal microphone.
[6] Single-function cell phone is defined as a cellular phone with no additional capabilities (can only be used for voice communications over a cellular network, storage of speed dial and caller ID information is permitted).
[7] Cell phones must be turned off and the battery removed while in the SCIF. In addition, multi-function cell phones must be approved and meet all other mitigation requirements.
[8] RF transmitter is defined as any radio frequency transmitter, except single-function cell phones that are addressed separately.
[9] Excludes mitigated IR function. Cables and cradles for personally owned PEDs are prohibited.

Chapter 11. Telecommunications Systems

A. Applicability

1. This guidance is compatible with, but may not satisfy, security requirements of other disciplines such as Information Systems Security, Communications Security (COMSEC), Operational Security (OPSEC), or TEMPEST.

2. This section outlines the security requirements that shall be met to ensure the following:

- Protection of information.
- Configuration of unclassified telecommunications systems, devices, features, and software.
- Access control.
- Control of the cable infrastructure.

B. Unclassified Telephone Systems

1. A baseline configuration of all unclassified telephone systems, devices, features, and software shall be established, documented, and included in the SCIF FFC.

2. The AO shall review the telephone system baseline configuration and supporting information to determine if the risk of information loss or exploitation has been suitably mitigated.

3. When security requirements cannot be met, unclassified telephone equipment shall be installed and maintained in non-discussion areas only.

4. When not in use, unclassified telephone systems shall not transmit audio and shall be configured to prevent external control or activation, technical exploitation, or penetration.

5. Unclassified telephone systems shall incorporate physical and software access controls to prevent disclosure or manipulation of system programming and data. The following specific requirements shall be met:

a) On-hook and off-hook audio protection shall be provided by equipment identified by the National Telephone Security Working Group within CNSSI 5006, National Instruction for Approved Telephone Equipment, or an equivalent TSG 2 system configuration within an AO-approved controlled space.

b) If a Computerized Telephone System (CTS) is selected for isolation, it shall be installed and configured as detailed in TSG 2 with software and hardware configuration control and audit reporting (such as station message detail reporting, call detail reporting, etc.).

c) System programming shall not include the ability to place, or keep, a handset off-hook.

d) Configuration of the system shall ensure that all on-hook and off-hook vulnerabilities are mitigated.

e) Equipment used for administration of telephone systems shall be installed inside the SCIF or a controlled area where access is limited to authorized personnel.

f) When local or remote CTS administration terminals are not contained within a controlled area and safeguarded against unauthorized manipulation, the use of CNSSI 5006 approved telephone instruments shall be required, regardless of the CTS configuration.

g) Speakerphones and audio conferencing systems shall not be used on unclassified telephone systems in SCIFs. Exceptions to this requirement may be approved by the AO when these systems have sufficient audio isolation from other classified discussion areas in the SCIF and procedures are established to prevent inadvertent transmission outside the SCIF.

h) Features used for voice mail or unified messaging services shall be configured to prevent access to remote diagnostic ports, internal dial tone, and dial plans.

i) Telephone answering devices and facsimile machines shall not contain features that introduce security vulnerabilities, e.g., remote room monitoring, remote programming, or other similar features that may permit off-premise access to room audio.

j) All unclassified telephone systems and associated infrastructure shall be physically isolated from classified information and telecommunications systems in accordance with DNI and CNSS TEMPEST guidance.

k) The security requirements and installation guidelines contained in the National Telecommunications Security Working Group (NTSWG) publication CNSSI 5000 shall be followed for Voice over Internet Protocol (VoIP) systems installed in a SCIF.

C. Unclassified Information Systems

1. Unclassified information systems shall be safeguarded to prevent hardware or software manipulation that could result in the compromise of data.

2. Information systems equipment with telephonic or audio features shall be protected against remote activation and/or removal of audio (analog or digitized) information.

3. Video cameras used for unclassified video teleconferencing and video recording equipment shall be deactivated and disconnected when not in use.

4. Video devices shall feature a clearly visible indicator to alert SCIF personnel when recording or transmitting.

D. Using Closed Circuit Television (CCTV) to Monitor the SCIF Entry Point(s)

1. CCTV may be used to supplement the monitoring of a SCIF entrance and to record events for investigation.

2. The system shall present no technical security hazard to the SCIF.

3. The system and all components, including communications and control lines, shall be exterior to the SCIF perimeter.

4. The system may provide a clear view of the SCIF entrance but not enable the viewer to observe classified information when the door is open nor external control pads or access control components that would enable them to identify PINs.

E. Unclassified Wireless Network Technology

1. The use of devices or systems utilizing wireless technologies pose a high risk and require approval from the AO, CTTA, and IT systems approving authority prior to introduction into the SCIF.

2. Wireless systems shall meet all TEMPEST and TSCM requirements and shall be weighed against the facilities overall security posture (i.e., facility location, threat, as well as any compensatory countermeasures that create SID) when evaluating these systems.

3. All separation and isolation standards provided in TEMPEST standards are applicable to unclassified wireless systems installed or used in SCIFs.

F. Environmental Infrastructure Systems

1. The FFC shall include information on whether or not environmental infrastructure systems (also referred to as building maintenance systems) are located in the SCIF. Examples include the following:

- Premise management systems
- Environmental control systems
- Lighting and power control units
- Uninterrupted power sources

2. The FFC shall identify all external connections for infrastructure systems that service the SCIF. Examples of the purpose of external connections include the following:

- Remote monitoring
- Access and external control of features and services
- Protection measures taken to prevent malicious activity, intrusion, and exploitation

G. Emergency Notification Systems

1. The introduction of electronic systems that have components outside the SCIF perimeter is prohibited, with the following exceptions:

a) The system is approved by the AO.

b) The system is required for security purposes.

c) The system is required under life safety regulations.

2. If required, and speakers or other transducers are part of a system that is not wholly contained in the SCIF but are installed in the SCIF for life safety or fire regulations, the system must be protected as follows:

a) All incoming wiring shall breach the SCIF perimeter at one point. TEMPEST or TSCM concerns may require electronic isolation and shall require review and approval by the CTTA.

b) One-way (audio into the SCIF) communication systems shall have a high gain amplifier.

c) Two-way communication systems shall only be approved when absolutely necessary to meet safety/security requirements. They shall be protected so that audio cannot leave the SCIF without the SCIF occupants being alerted when the system is activated.

d) All electronic isolation components shall be installed within the SCIF and as close to the point of SCIF penetration as possible.

H. Systems Access

1. Installation and maintenance of unclassified systems and devices supporting SCIF operations may require physical or remote access. The requirements outlined in this section shall apply to telecommunications devices located within the SCIF or in a controlled area outside the SCIF.

2. Installation and maintenance personnel requiring physical access shall possess the appropriate clearance and access, or will be escorted and monitored at all times within the SCIF by technically knowledgeable, U.S. SCI-indoctrinated personnel.

3. Remote maintenance shall be protected against manipulation or activation.

4. All capabilities for remote maintenance and diagnostic services shall be specified in the FFC.

5. The FFC shall identify all procedures and countermeasures to prevent unauthorized system access, unauthorized system modification, or introduction of unauthorized software.

6. Remote maintenance and diagnosis may be performed from a SCIF or an adjacent controlled area over a protected link in accordance with FIPS 140-2.

7. Telephone systems only may be accessed over an unclassified telephone line as specified in TSG 2 Standard, Section 4.c.

I. Unclassified Cable Control

1. To the extent possible, all telecommunications cabling shall enter the SCIF through a single opening and allow for visual inspection.

2. Cable, either fiber or metallic, shall be accounted for from the point of entry into the SCIF.

   a) The accountability shall identify the precise use of every cable through labeling.

   b) Log entries may also be used.

   c) Designated spare conductors shall be identified, labeled, and bundled together.

3. Unused conductors shall be removed. If removal is not feasible, the metallic conductors shall be stripped, bound together, and grounded at the point of ingress/egress.

4. Unused fiber shall be uncoupled from the interface within the SCIF, capped, and labeled as unused fiber.

J. References

1. Overview

   a) The NTSWG publishes guidance for the protection of sensitive information and unclassified telecommunications information processing systems and equipment.

   b) NTSWG documents are currently in transition from TSG/NTSWG documents to Committee on National Security Systems (CNSS) publications.

   c) The List of References is provided for use by personnel concerned with telecommunications security.

2. List of References

   a) TSG Standard 1 (Introduction to Telephone Security). Provides telephone security background and approved options for telephone installations in USG sensitive discussion areas.

   b) TSG Standard 2 (TSG Guidelines for Computerized Telephone Systems) and Annexes. Establishes requirements for planning, installing, maintaining, and managing CTS, and provides guidance for personnel involved in writing contracts, inspecting, and providing system administration of CTS.

   c) TSG Standards 3, 4, 5, and CNSSI 5001. Contains design specifications for telecommunication manufacturers and are not necessarily applicable to facility security personnel.

   d) CNSSI 5000. Establishes requirements for planning, installing, maintaining, and managing VoIP systems.

e) CNSSI 5006. Lists approved equipment which inherently provide on-hook security.

f) NTSWG Information Series (Computerized Telephone Systems). A Review of Deficiencies, Threats, and Risks, December 1994). Describes deficiencies, threats, and risks associated with using computerized telephone systems.

g) NTSWG Information Series (Executive Overview, October 1996). Provides the salient points of the TSG standards and presents them in a non-technical format.

h) NTSWG Information Series (Central Office (CO) Interfaces, November 1997). Provides an understanding of the types of services delivered by the local central office and describes how they are connected to administrative telecommunications systems and devices.

i) NTSWG/NRO Information Series (Everything You Always Wanted to Know about Telephone Security…but were afraid to ask, 2nd Edition, December 1998). Distills the essence of the TSG standards (which contain sound telecommunications practices) and presents them in a readable, non-technical manner.

j) NTSWG/NRO Information Series (Infrastructure Surety Program…securing the last mile, April 1999). Provides an understanding of office automation and infrastructure system protection that contributes to SCIF operation.

k) NTSWG Information Series (Computerized Telephone Systems Security Plan Manual, May 1999). Assists to implement and maintain the "secure" operation of CTSs as used to support SCIF operations. (The term "secure" relates to the safe and risk-free operation, not the use of encryption or a transmission security device.)

l) Director of National Intelligence, Intelligence Community Directive 702, Technical Surveillance Countermeasures.

m) Director of National Intelligence, Intelligence Community Directive 503, Intelligence Community Information Technology Systems Security Risk Management, Certification and Accreditation.

n) SPB Issuance 00-2 (18 January 2000). Infrastructure Surety Program and the Management Assessment Tool.

Chapter 12. Management and Operations

A. Purpose

To establish safeguards and procedures necessary to prevent the unauthorized disclosure of SCI and other classified national security information in SCIFs. To define administrative processes that shall provide a secure operating environment and enable adequate security oversight, management, and operations of SCIFs

B. SCIF Repository

1. As required by ICD 705, the DNI shall manage an inventory of information on all SCIFs which shall be reported to the DNI via the SCIF repository not later than 180 days after the effective date of ICD 705 and updated no later than 30 days after changes occur thereafter.

2. Reportable SCIF Administrative Information:

- SCIF ID
- AO ID
- Location of SCIF
  - In U.S.
  - Outside U.S.
  - Under COM
- SCIF Type
  - Closed Storage
  - Open Storage
  - SWA
  - TSWA
  - T-SCIF
- SID
- Initial Accredited Date
- Re-Accreditation Date
- Review date
- Waivers
- Date waiver approved
- Waiver approval authority/ID
- Exceeded standards
- Does not meet standards
- Date waiver expires

C. SCIF Management

1. SO Responsibilities:

a) The SCIF SO shall be responsible for all aspects of SCIF management and operations to include security policy implementation and oversight.

b) The SO shall prepare a comprehensive Standard Operating Procedure (SOP) that documents management and operations of the SCIF.

c) The SO shall review the SOP at least annually and revise it when any aspect of SCIF security changes.

d) The SO shall issue and control all SCIF keys. Locks shall be changed when a key is lost or is believed to be compromised.

e) The SO shall conduct annual self-inspections to ensure the continued security of SCIF operations, identify deficiencies, and document corrective actions taken. Inspection results shall be forwarded to the AO and copies retained by the SO until the next inspection.

f) The SO shall create an emergency plan to be approved by the AO. Plans shall be reviewed and updated annually and all SCIF occupants shall be familiar with the plans. Drills shall be conducted as circumstances warrant, but at least annually. The emergency plan may be an extension of an overall department, agency, or installation plan.

(1) For SCIFs within the U.S., emergency plans shall address the following:

- Fire
- Natural disaster
- Civil unrest
- Intrusion detection system failures
- Admittance of emergency personnel
- The protection of SCIF occupants and classified information
- Evacuation requirements and emergency destruction

(2) For SCIFs outside the U.S., emergency plans shall address all of the above and shall include instructions for the emergency destruction or removal of SCI where political instability, terrorism, host country attitudes, or criminal activity suggest the possibility that a SCIF may be overrun.

g) The SO shall control passwords to access the maintenance mode of copiers and other office equipment.

h) The SO shall develop an SOP that addresses actions to be taken when IDS maintenance access is required.

2. Required SCIF Documentation

a) Copies of all documents relating to SCIF accreditation shall be maintained by the SCIF SO and include, but not limited to, the following:

- SCIF accreditation
- Fixed facility checklist
- Construction security plan
- CTTA evaluation
- IS accreditation
- SOPs
- The results of the final acceptance test of the original system installation and any tests to system modifications made thereafter
- Emergency plan

b) As applicable, the following documents shall be maintained by the SCIF SO:

- TSCM reports
- Co-utilization agreements
- Memoranda of agreement
- Self-inspection reports
- Compartmented area checklist
- Shipboard SCIF checklist
- Aircraft/UAV checklist
- A copy of the CRZH certificate (UL 2050)

D. SOPs

1. A comprehensive SOP that documents management and operations of the SCIF shall be prepared by the SO.

2. The SOP shall be included in the accreditation package and approved by the AO.

3. All individuals assigned to, or having unescorted access to, the SCIF shall be familiar with and adhere to the SOP.

4. All SOP revisions shall be provided to the AO for approval.

5. SOPs shall be tailored to a specific SCIF.

6. SOPs shall include specific areas of security concern as defined by program or mission requirements.

7. The following are examples of subjects that should be addressed in an SOP:

- Self-inspections
- Security incidents and violations
- Alarm systems and response requirements
- Opening and closing procedures

- Access controls
- Visitor access
- Escort procedures
- Equipment maintenance procedures
- Handling, processing, and destruction of classified material
- Badge procedures
- End-of-day security procedures
- Personnel and package inspection procedures
- Secure communications device instructions

E. Changes in Security and Accreditation

1. Changes affecting the security posture of the SCIF shall be immediately reported by the SO to the AO to include any corrective or mitigating actions taken.

2. If an AO determines that SCIF security conditions are unsatisfactory, SCIF accreditation may be suspended or revoked.

   a) All appropriate authorities and SCIF occupants shall be immediately notified and the SCIF closed until deficient conditions are corrected.

   b) All SCI material shall be relocated to another SCIF.

F. General

1. Except for law enforcement officials or other personnel required to be armed in the performance of their duties, firearms and other weapons are prohibited in SCIFs.

2. Photography, video, and audio recording equipment are restricted but may be authorized for official purposes as documented in the SOP.

3. Procedures shall be established to control IT storage media upon entering or exiting a SCIF in accordance with ICD 503 (Intelligence Community Information Technology Systems Security Risk Management, Certification and Accreditation).

4. SCIF perimeter doors shall remain closed and controlled at all times. When a door needs to be open, it shall be continually monitored by an SCI-indoctrinated individual.

5. All SCIF occupants shall be familiar with emergency plans and drills shall be conducted as circumstances warrant, but at least annually.

6. Where the risk of hostile action is significant, SCI materials shall be maintained at an absolute minimum.

G. Inspections

1. SCIF inspections shall be performed by the AO, or designee, prior to accreditation.

2. Heads of IC elements shall conduct periodic security reviews to ensure the efficiency of SCIF operations, identify deficiencies, and document corrective actions taken. All relevant documentation associated with SCIF accreditation, inspections, and security administration may be subject to review.

3. Periodic inspections shall be conducted based on threat, facility modifications, sensitivity of programs, past security performance, or at least every five years.

4. SOs shall conduct annual self-inspections to ensure the continued security of SCIF operations, identification of deficiencies, and to document corrective actions taken. Inspection results shall be forwarded to the AO and copies retained by the SO until the next inspection.

5. Authorized inspectors shall be admitted to a SCIF without delay or hindrance when inspection personnel are properly certified to have the appropriate level of security clearance and SCI indoctrination for the security level of the SCIF.

6. Short-notice or emergency conditions may warrant entry without regard to the normal SCIF duty hours.

7. Government-owned equipment needed to conduct SCIF inspections will be admitted into the SCIF without delay.

H. Control of Combinations

1. Combinations to locks installed on security containers/safes, perimeter doors, windows, and any other opening should be changed in the following circumstances:

   a) When a combination lock is first installed or used.

   b) When a combination has been subjected, or believed to have been subjected, to compromise.

   c) Whenever a person knowing the combination no longer requires access to it unless other sufficient controls exist to prevent access to the lock.

   d) At other times when considered necessary by the SO.

2. When the lock is taken out of service, it will be reset to 50-25-50.

3. All combinations to the SCIF entrance doors should be stored in a different SCIF. When this is not feasible, alternative arrangements shall be made in coordination with the AO.

I. De-Accreditation Guidelines

SCIF closeouts and de-accreditations shall comply with the following procedures:

1. Inspect all areas, storage containers, and furniture for the presence of classified, sensitive, or proprietary information.

2. Reset safe combinations to 50-25-50 and lock the containers.

3. Affix written certification to all storage containers that the container does not contain classified, sensitive, or proprietary information. The certification shall include the date of inspection and the name and signature of the inspector.

4. Ensure that reproduction and printing equipment is decertified or disposed of in accordance with AO guidance.

5. Dispose of, or relocate, SCI computer equipment, media, hard drives, and portable storage media as approved by the AO.

6. Request revocation of Automated Information Systems (AIS) accreditation.

7. Request revocation of SCIF accreditation.

8. If the SCIF will be used for another mission or project that requires alarms, transfer alarm service to the new activity.

9. If the SCIF will not be used for another mission or project and all classified information has been removed, the following shall occur:

   a) Alarm service shall be discontinued.

   b) Combinations on the entrance door and any GSA containers shall be changed to 50-25-50.

   c) All keys shall be accounted for.

J. Visitor Access

1. General Requirements

   a) Visitor logs shall be used to record all SCIF visitors and include the following information:

   - Visitor's full name
   - Organization
   - Citizenship
   - Purpose of the visit
   - Point of contact
   - Date/time of the visit

   b) Government-issued identification shall be required as a means of positive identification.

c) Visitor logs shall be retained for two years after the date of the last entry.

d) Visitor clearance verification shall be accomplished using the DNI Scattered Castles database to the greatest extent possible.

e) Visitors whose clearances have not been verified may be permitted, under escort, entry into the SCIF; however, access to and/or discussion of classified information shall be denied pending clearance verification.

f) Visitors, SCIF occupants, and their possessions may be subject to screening and inspections to deter the unauthorized removal of classified material or the introduction of prohibited items or contraband.

g) Screening and inspection procedures shall be documented and approved by the AO.

2. SCIF Access by Uncleared and Emergency Personnel

a) Uncleared personnel shall be escorted at all times by cleared personnel.

b) The ratio of cleared escorts to uncleared personnel shall be determined on a case-by-case basis by the SO.

c) Prior to assuming escort duties, all escorts shall receive a briefing by the SO or designee outlining their responsibilities.

d) Uncleared personnel shall be kept under observation at all times while in the SCIF. Escorts shall ensure precautions are taken to preclude inadvertent access to classified information.

e) Lights, signs, or other alerting mechanisms or procedures shall be used to alert SCIF occupants of the presence of uncleared personnel.

f) Emergency personnel and equipment shall be allowed access to SCIFs and be escorted to the degree practical. If exposed to classified information, they shall sign an inadvertent disclosure statement when feasible.

K. Maintenance

1. SCI-indoctrinated maintenance personnel shall be used to the extent possible.

2. Procedures for performing maintenance on office equipment, including the use of diagnostic equipment, shall be documented in the SCIF SOP.

3. Computerized diagnostic equipment, to include associated hardware and software, shall be kept under control within a SCIF and shall be managed to prohibit the migration of classified data when connected to classified systems. Procedures shall be documented in the SOP.

4. Passwords to access the maintenance mode of copiers and other office equipment shall be controlled by the SO.

5. Office equipment that is no longer serviceable, such as copiers and classified fax machines, shall be sanitized by having volatile memory erased and non-volatile memory and disk storage removed for terminal destruction.

L. IDS and ACS Documentation Requirements

The following documents and records shall be maintained within the SCIF:

1. System Plans such as system design, equipment, and installation documentation.

2. MOAs established for external monitoring, response, or both, and which shall include the following information:

- Response time for response forces and SCIF personnel.
- Responsibilities of the response force upon arrival.
- Maintenance of SCIF points of contact.
- Length of time response personnel are required to remain on-site.

3. Monitoring Station SOP and/or a copy of the monitoring station UL certificate.

4. Maintenance access SOP.

5. Records, logs, and archives.

6. Records of system testing (for two years) shall include the following information:

- Testing dates
- Names of individuals performing the test
- Specific equipment tested
- Malfunctions detected
- Corrective actions taken

7. Records of guard or response force personnel testing.

8. The PCU shall contain a secured, non-volatile event (alarm) log capable of storing at least six months of events, or a printer shall be installed that provides real-time recording of openings, closings, alarms, trouble alarms, and loss of communications.

a) If the system has no provision for automatic entry into archive, the AO may authorize a manual logging system.

b) Monitoring personnel shall record the time, source, type of alarm, and action taken.

c) The SCIF SO shall routinely review the historical records.

d) Results of investigations and observations by the response force shall also be maintained at the monitoring station.

e) Records of alarm annunciations shall be retained for two years.

f) Shunting or masking of any zone or sensor shall be logged in the system archives.

g) All maintenance periods shall be archived into the system.

h) An archive shall be maintained for all remote service mode activities.

9. Access Control Systems Records which include:

a) The active assignment of ID badge/card, PIN, level of access, entries, and similar system-related information

b) Records of personnel removed from the system which shall be retained for two years from the date of removal.

10. Records of security incidents (violations/infractions) regarding automated systems shall be retained by the SO for five years from the date of an incident or until investigations of system violations and incidents have been resolved.

M. Emergency Plan

1. The SO shall create an emergency plan.

2. The emergency plan shall be approved by the AO and maintained on-site for each accredited SCIF.

3. The emergency plan may be an extension of an overall department, agency, or installation plan.

4. The emergency plan shall address the following:

- Fire
- Natural disaster
- Civil unrest
- Admittance of emergency personnel into a SCIF
- The protection of SCIF occupants and classified information

- Evacuation requirements
- Emergency destruction

5. Plans shall be reviewed at least annually and updated as necessary.

6. All SCIF occupants shall be familiar with the plans and drills shall be conducted as circumstances warrant, but at least annually.

7. Where political instability, terrorism, host country attitudes, or criminal activity suggests the possibility that a SCIF may be overrun, emergency plans shall include instructions for the secure destruction or removal of SCI under adverse circumstances and include contingencies for loss of electrical power and non-availability of open spaces for burning or chemical decomposition of material.

8. Where the risk of hostile actions are significant, SCI holdings and reference materials shall be maintained at an absolute minimum required for current working purposes. If reference or other material is needed, it shall be obtained from other activities and returned or destroyed when no longer needed.

Chapter 13. Forms and Plans

This page intentionally left blank.

CLASSIFY ACCORDING TO FACILITY SPONSOR CLASSIFICATION GUIDANCE

Fixed Facility Checklist

[Insert Org Name]

[Date]

[Address]

SCIF Fixed Facility Checklist

CLASSIFY ACCORDING TO FACILITY SPONSOR CLASSIFICATION GUIDANCE

CHECK Applicable blocks			
☐ Domestic	☐ Overseas Not COM	[ ] Overseas COM	
☐ Pre-construction, Complete Sections as Required by A/O	☐ Final FFC Accreditation	☐ Update/Page Change	

Checklist Contents

Section A: **General information**

Section B: **Security-in-Depth**

Section C: **SCIF Security**

Section D: **Doors**

Section E: **Intrusion Detection Systems (IDS)**

Section F: **Telecommunication Systems and Equipment Baseline**

Section G: **Acoustical Protection**

Section H: **Classified Destruction Methods**

Section I: **Information Systems/TEMPEST/Technical Security**

List of Attachments

-- **TEMPEST Checklist**

-- **Other Attachments as Required**

(Diagrams must be submitted)

Section A: General Information						
1.	**SCIF Data**					
	Organization/Company Name					
	SCIF Identification Number (*if applicable)*					
	Organization subordinate to *(if applicable)*					
	Contract Number & Expiration Date *(if applicable)*					
	Concept approval Date/by *(if applicable)*					
	Cognizant Security Authority (CSA)					
	Defense Special Security Communication System Information *(if applicable)*					
	DSSCS Message Address					
	DSSCS INFO Address					
	If no DSSCS Message Address, please provide passing instructions					
2.	**SCIF Location**					
	Street Address					
	Building Name/#		Floor(s)			
	Suite(s)		Room(s) #			
	City		Base/Post			
	State/Country		Zip Code			
3.	**Mailing Address (if different from SCIF location)**					
	Street or Post Office Box					
	City		State		Zip Code	

4.	**Responsible Security Personnel**		
		PRIMARY	**ALTERNATE**
	Name		
	Commercial Phone		
	DSN Phone		
	Secure Phone		
	STE Other Phone		
	Home		
	Secure Fax		
	Command or Regional Special Security Office/Name (SSO) *(if applicable)*		
	Commercial Phone		
	Other Phone		
5.	**E-Mail Address of Responsible Security Personnel**		
	Classified		(Network/System Name & Level)
	Unclassified		(Network/System Name)
	Other		(Network/System Name)

6.	**Accreditation Data (Ref Chapter: 12E)**			
	a. Category/Compartments of SCI Requested: 1) Indicate storage requirement:			
	☐ Open	☐ Closed	☐ Continuous Operation	☐ None
	2) Indicate the facility type			
	☐ Permanent	☐ Temporary	☐ Secure Working Area	☐ TSWA
	3) Co-Use Agreements	☐ Yes	☐ No	If yes, provide sponsor:
	b. SAP(s) co-located within SCIF	☐ Yes	☐ No	If yes, identify SAP Classification level (check all that apply)
	☐ SCI	☐ Top Secret	☐ Secret	☐ Confidential

	c. SCIF Duty Hours	Hours to Hours:			Days Per Week:
	d. Total square footage that the SCIF occupies:				
	e. Has or will CSA requested any waivers?	☐ Yes	☐ No	☐ N/A	If yes, attach a copy of approved waiver
	Construction/Modification (Ref: Chapter 3B)				
	Is construction or modification complete?	☐ Yes	☐ No	☐ N/A	If no, enter the expected date of completion
	Was all construction completed in accordance with the CSP?	☐ Yes	☐ No	☐ N/A	If not, explain changes.
7.	**Inspections (Ref: Chapter 12G)**				
	Has a TSCM Inspection been performed			☐ Yes	☐ No
	If yes, provide the following				
	a. TSCM Service completed by				On _____ *(Attach a copy of report)*
	Were deficiencies corrected?	☐ Yes	☐ No	☐ N/A	If no, explain
	b. Last physical security inspection by				On _____ *(Attach a copy of report)*
	Were deficiencies corrected?	☐ Yes	☐ No	☐ N/A	If no, explain
	c. Last Staff Assistance Visit by:				On _____ *(Attach a copy of report)*
8.	**REMARKS:**				

Section B: Security-in-Depth					
1.	**Describe building exterior Security (Ref: Chapter 2B)**				
	a. Is the SCIF located on a military installation, embassy compound, USG compound or contractor compound with a dedicated U.S. person response force?			☐ Yes	☐ No
	b. Is the SCIF located in an entire Building			☐ Yes	☐ No
	c. Is the SCIF located on a single floor of Building			☐ Yes	☐ No
	d. Is the SCIF located in a secluded area of Building			☐ Yes	☐ No
	e. Is the SCIF located on a fenced compound with access controlled vehicle gate and/or pedestrian gate?			☐ Yes	☐ No
	Fence Type		Height	Does it surround the compound? How is it controlled? How many gates? Hours of usage? How are they controlled when not in use?	
	1) Is the Fence Alarmed?	If so, describe alarm systems (i.e. – Microwave)			
	2) Fence Lighting				
	3) Building Lighting				
	f. Is there external CCTV coverage? If so, describe the CCTV system. *(include monitor locations on map)*				
	g. Guards	☐ Yes	☐ No	☐ Static	☐ Roving
	■ Clearance level of guards *(if applicable)*				
	■ During what hours/days?				
	Any SCIF duties?	☐ Yes	☐ No	If yes, describe duties	

2.	**Describe Building Security** *(Please provide legible general floor plan of the SCIF perimeter)*						
	Is the SCIF located in a controlled building with separate access controls, alarms, elevator controls, stairwell control, etc. required to gain access to building or elevator?	□ Yes	□ No	If yes, is SCIF controlled by bldg owners?		If controlled by SCIF owners, is alarm activation reported to SCIF owners by agreement?	
				□ Yes	□ No	□ Yes	□ No
	b. Construction Type						
	c. Windows						
	d. Doors						
	e. Describe Bldg Access Controls	□ Continuous	□ Yes	□ No	If no, during what hours?		
	■ Clearance level of guards *(if applicable)*		Any SCIF duties? If yes, describe duties?		During what hours/days?		
			□ Yes	□ No			
3.	**Describe Building Interior Security**						
	Are office areas adjacent to the SCIF controlled and alarmed? If yes, describe adjacent areas and types of alarm systems.	□ Yes	□ No	Controlled by SCIF Owner?		If controlled by Bldg owner, alarm activation reported to SCIF owner by agreement?	
				□ Yes	□ No	□ Yes	□ No

4.	**Security In-Depth**						
	What external security attributes and/or features should the AO consider before determining whether or not this facility has Security In-Depth? Please identify/explain all factors:						

Section C: SCIF Security				
1.	**How is access to the SCIF controlled (Ref: Chapter 8)**			
	a. By Guard Force	□ Yes	□ No	If yes, what is their minimum security clearance level?
	b. Is Guard Force Armed?	□ Yes	□ No	□ N/A
	c. By assigned personnel?	□ Yes	□ No	If yes, do personnel have visual control of SCIF entrance door?
	d. By access control device?	□ Yes	□ No	If yes, what kind?
	□ Automated access control system		□ Non-Automated	
	If Non-Automated			
	1. Is there a by-pass key?	□ Yes	□ No	□ N/A
	■ If yes, how is the by-pass key protected?			
	2. Manufacturer:		Model:	
	(Attach sheet if additional space is required for this information)			
	If Automated			
	1. Is there a by-pass key?	□ Yes	□ No	□ N/A
	■ If yes, how is the by-pass key protected?			
	2. Manufacturer:		Model:	
	(Attach sheet if additional space is required for this information)			
	3. Are access control	□ Yes	□ No	If no, explain the physical protection

	transmission lines protected by 128-bit encryption/FIBS 140?			provided.		
	4. Is automated access control system located within a SCIF or an alarmed area controlled at the **SECRET** level?				□ Yes	□ No
	5. Is the access control system encoded and is ID data and PINs restricted to SCI-indoctrinated personnel?				□ Yes	□ No
	6. Does external access control outside SCIF have tamper protection?				□ Yes	□ No
	7. Is the access control device integrated with IDS			□ Yes	□ No	□ N/A
	8. Is the access control device integrated with a LAN/WAN System?			□ Yes	□ No	□ N/A
2.	**Does the SCIF have windows? (Ref: Chapter 3F)**					
	a. Are they acoustically protected?	□ Yes	□ No	□ N/A	If yes, how? Please explain	
	b. Are they secured against forced entry?	□ Yes	□ No	□ N/A	If yes, how? Please explain	
	c. Are they protected against visual surveillance?	□ Yes	□ No	□ N/A	If yes, how? Please explain	
3.	**Do ventilation ducts penetrate the SCIF perimeter? (Ref: Chapter 3G)**				□ Yes	□ No
	(Indicate all duct penetrations and their size on a separate floor plan as an attachment)					
	a. Any ducts over 96 square inches that penetrate perimeter walls?				□ Yes	□ No
	■ If yes, how are they protected?					
	□ IDS (Describe in Section E)	□ Bars/Grills/Metal Baffles		□ Other, please explain		
	■ Describe Protection:					
	b. Inspection ports?	□ Yes		□ No		
	■ If yes, are they within the SCIF?	□ Yes		□ No		
	■ If no, are they secured?	□ Yes	□ No	Please explain		

	c. Do all ventilation ducts penetrating the perimeter meet acoustical requirements?	□ Yes	□ No	
	*(**NOTE:** All ducts and vents, regardless of size may require acoustical protection)*			
	■ If yes, how are they protected?			
	□ Metal Baffles	□ Noise Generator	□ Z-Duct	□ Other (Describe)
	Describe the method of ventilation and duct work protection *(if applicable)*			
4.	**Construction (Ref: Chapter 3B)**			
	a. Describe Perimeter Wall Construction:			
	b. True ceiling (material and thickness)?	□ Yes	□ No	
	c. False ceiling?	□ Yes	□ No	
	■ If yes, what is the type of ceiling material?			
	■ What is the distance between false and true ceiling?			
	d. True floor (material and thickness)?	□ Yes	□ No	
	e. False floor?	□ Yes	□ No	
	■ If yes, what is the type of false flooring?			
	■ What is the distance between false and true floor?			
5.	**REMARKS:**			
Section D: Doors				
1.	**Describe SCIF primary entrance door construction (indicate on floor plan) (Ref: Chapter 3E)**			
	a. Does the door and doorframe meet sound attenuation requirements?	□ Yes	□ No	
	■ If no, have acoustical countermeasures been employed?	□ Yes	□ No	

	b. Describe SCIF perimeter doors to include thickness and type of door.			
	c. Is an automatic door closer installed?	□ Yes	□ No	If no, please explain
	d. Is a door sweep/thresholds installed?	□ Yes	□ No	If no, please explain
	e. Is an acoustical/astragal strip installed?	□ Yes	□ No	If no, please explain

2.	**Describe number and type of doors used for SCIF emergency exits and other perimeter doors including day access (show on floor plan)**		
	a. Do the doors and doorframes meet sound attenuation requirements?	□ Yes	□ No
	■ If no, have acoustical countermeasures been employed?	□ Yes	□ No
	b. Has exterior hardware been removed?	□ Yes	□ No
	c. Has local enunciator been installed?	□ Yes	□ No
	■ Describe how the door hinges exterior to the SCIF are secured against removal (if in an uncontrolled area).		
3.	**Locking Devices**		
	a. Is the primary entrance door equipped with a GSA-approved pedestrian door deadbolt meeting Federal Specification FF-L-2890 including lock meeting FF-L-2740A	□ Yes	□ No
	b. List combination lock manufacturer, model number and group rating		
	Manufacturer:	Model Number:	
	c. Does the entrance door stand open into an uncontrolled area?	□ Yes	□ No
	If yes, please describe tamper protection.		

	d. Emergency exits and other perimeter doors: Describe (locks, metal strip/bar, deadbolts, local annunciation, and panic hardware).
	e. Where is the lock combination(s) filed? (Please identify the SCIF AO and SCIF ID#)
4.	**REMARKS:**

Section E: Intrusion Detection Systems					
1.	**General IDS Description (Ref: Chapter 7A)**				
	a. Has the IDS configuration been approved by the AO?			□ Yes	□ No
	b. Identity of IDS installer:		Identity of IDS monitoring firm:		
	c. Premise Control Unit (PCU)				
	Manufacturer	Model Number	Tamper Protection	□ Yes	□ No
	d. Is the PCU located inside the SCIF perimeter (indicated on floor plan)?	□ Yes	□ No	If no, please explain	
	e. Location of interior motion detection protection				
	■ Accessible points of entry/perimeter?			□ Yes	□ No
	■ Any others? Specify			□ Yes	□ No
	f. Has the IDS alarm monitor station been installed to Underwriters Laboratories certified standards?			□ Yes	□ No
	Contractor facility submit copy of Certificate				
	g. Has the IDS passed AO or UL 2050 installation and acceptance tests?			□ Yes	□ No
	■ If yes, attach a copy of certificate (Non-commercial proprietary system must				

	answer all questions)		
	h. High Security Switches Type I	□ Yes	□ No
	i. High Security Switches Type II	□ Yes	□ No
	j. Motion sensor (indicate sensor placement on a legible floor plan; 8 ½ x 11″ or 11″ x 17″ paper)		
	k. Are any other intrusion detection equipment sensors/detectors in use?	□ Yes	□ No
	■ Please identify make, model and manufacturer and function (indicate on floor plan)		

	Make	Model	Manufacturer	Function

	l. Does the IDS extend beyond the SCIF perimeter?	□ Yes	□ No
	m. Can the status of PCU be changed from outside IDS protection?	□ Yes	□ No
	■ If yes, is an audit conducted daily?	□ Yes	□ No
	n. Do any intrusion detection equipment components have audio or video capabilities?	□ Yes	□ No
	■ If yes, please explain.		
	o. PCU Administrator SCI indoctrinated?	□ Yes	□ No
	p. External Transmission Line Security:		
	q. What is the method of line security? National Institute of Standards and Technology (NIST) FIBS 140-2 encryption?	□ Yes	□ No
	1) If yes, has the encryption been certified by NIST or another independent testing laboratory?	□ Yes	□ No
	2) If not NIST standard, is there an alternate?	□ Yes	□ No
	3) If yes, please explain		
	4) Does the alternate line utilize any cellular or other Radio Frequency (RF) capability?	□ Yes	□ No

	Manufacturer	Model Number

	r. Does any part of the IDS use local or wide area network (LAN/WAN)?	□ Yes	□ No	□ N/A
	1) Is the host computer dedicated solely for security	□ Yes	□ No	□ N/A

	purposes?			
	2) Is the host computer secured within an alarmed area controlled at the **SECRET** or higher level?	□ Yes	□ No	□ N/A
	3) Is the host computer protected through firewalls or similar devices?	□ Yes	□ No	□ N/A
	4) Is the password for the host computer unique for each user and at least 8-characters long consisting of alpha, numeric, and special characters?	□ Yes	□ No	□ N/A
	5) Is the password changed semi-annually?	□ Yes	□ No	□ N/A
	6) Are remote security terminals protected the same as the host computer?	□ Yes	□ No	□ N/A
	■ If no, please explain:			
2.	**Is emergency power available for the IDS?**	□ Yes	□ No	□ N/A
	Generator?		□ Yes	□ No
	■ If yes, how many hours?			
	Battery?		□ Yes	□ No
	■ If yes, how many hours?			
3.	**Where is the IDS alarm monitor station located?**			
4.	**Does the monitor station have any remote capabilities (i.e., resetting alarms, issuing PINs, accessing/securing alarms, etc.?**	□ Yes	□ No	□ N/A
	■ If yes, please explain:			
5.	**Does the IDS have any automatic features (i.e., timed auto-secure, auto-access capabilities?**	□ Yes	□ No	□ N/A
6.	**Does the PCU/keypad have dial out capabilities?**	□ Yes	□ No	□ N/A
7.	**IDS response personnel**	□ Yes	□ No	□ N/A
	a. Who provides initial alarm response?			
	b. Does the response force have a security clearance?		□ Yes	□ No
	■ If yes, what is the clearance level?			
	c. Do you have a written agreement with external response force?		□ Yes	□ No
	d. Emergency procedures documented?		□ Yes	□ No
	e. Response to alarm condition: _____ Minutes			

	f. Are response procedures tested and records maintained?	□ Yes	□ No
	■ If no, please explain:		
	g. Has a catastrophic failure plan been approved by the CSA?	□ Yes	□ No
8.	**Does the IDS undergo semiannual testing?**	□ Yes	□ No
9.	**Have IDS records been maintained?**	□ Yes	□ No
	■ If no, please explain:		
10.	**REMARKS:**		
	Section F: Telecommunication Systems and Equipment Baseline		
1.	**Is the facility declared a "No Classified Discussion Area"? (Ref: Chapter 11A)**	□ Yes	□ No
	■ If yes, then the audio protection questions within this section may be identified as N/A		
	■ If the facility is declared a "No Classified Discussion Area", are warning notices posted prominently within the facility?	□ Yes □ No	□ N/A
2.	**Does the facility have any unclassified telephones that are connected to the commercial public switch telephone network (PSTN)?**	□ Yes	□ No
	■ What is the method of on-hook protection?		
	1) CNSSI 5006 (TSG-6) approved telephone or instrument	□ Yes □ No	□ N/A
	(Please identify all telephone equipment/stations and/or instruments being used either below or as an attachment)		
	Manufacturer / Model Number	TSG Number *(if applicable)*	
	2) CNSSI 5006 (TSG-6) approved disconnect device?	□ Yes □ No	□ N/A
	a. Line disconnect?	□ Yes □ No	□ N/A
	b. Ringer protection?	□ Yes □ No	□ N/A
	Manufacturer / Model Number	TSG Number *(if applicable)*	
	3) CNSSI 5002 (TSG-2) configured computerized telephone system (CTS)?	□ Yes □ No	□ N/A
	a. If yes, please provide the following information about the CTS		

	Manufacturer	Model	
	b. If yes, please provide specific location of the CTS		
	c. How is the facility protecting the CTS physically controlled?		
	d. If yes, what is the clearance level (if any) of facility or area where the switch is located and how is area controlled?		
	e. How are all cables, signal lines and intermediate writing frames between the SCIF telephones and the CTS physically protected within a physically controlled space?		
	f. Are all program media, such as tapes and/or disks, from the CTS afforded physical protection from unauthorized alterations?	□ Yes	□ No
	g. Is an up-to-date master copy of the CTS software program maintained for confirmation and/or reloading of the operating system?	□ Yes	□ No
	h. Does the CTS have the capability to force or hold a telephone station off-hook?	□ Yes	□ No
	i. Does the CTS use remote maintenance and diagnostic procedures or other remote access features?	□ Yes	□ No
	■ If yes, explain maintenance procedures		
	j. Do the CTS installers and programmers have security clearances?	□ Yes	□ No
	■ If yes, at what access level (minimum established by AO)		
	■ If no, are escorts provided?	□ Yes	□ No
	4) Is it a Voice over Internet Protocol (VOIP) phone system (IPS) (Ref CNSSI 5000)?	□ Yes	□ No	□ N/A
	a. If yes, please provide the following information about the IPS		
	Manufacturer	Model Number	IPS Location
	b. Do all unclassified telephones within the facility have a hold, mute and/or push-to-talk [handset] capability, (for off-hook audio protection)?	□ Yes	□ No	□ N/A
	■ If no, please explain?		
	c. Is access to the facility housing the IPS physically controlled?	□ Yes	□ No
	d. If yes, what is the clearance level (if any) of facility or area where the switch is located and how is the area controlled?		

	e. Are all cables, signal lines and intermediate wiring frames between the SCIF telephones and the IPS physically protected or contained within a physically controlled space?	□ Yes	□ No
	■ If no, please explain?		
	f. Are all program media, such as tapes and/or disks, from the IPS afforded physical protection from unauthorized alterations?	□ Yes	□ No
	g. Is an up-to-date master copy of the IPS software program maintained for confirmation and/or reloading of the operating system?	□ Yes	□ No
	h. Does the IPS have the capability to force or hold a telephone station off-hook?	□ Yes	□ No
	i. Does the IPS use remote maintenance and diagnostic procedures or other remote access features?	□ Yes	□ No

	j. Do the IPS installers and programmers have security clearances?		□ Yes	□ No
	■ If yes, at what access level (minimum established by AO)?			
	■ If no, are escorts provided?		□ Yes	□ No
3.	**Automatic telephone call answering**			
	a. Are there any automatic call answering devices for the telephones in the SCIF?		□ Yes	□ No
	1) If yes, please identify the type			
	■ Voicemail/unified message service?		□ Yes	□ No
	■ Standalone telephone answering device (TAD)?		□ Yes	□ No
	2) Provide manufacturer and model number of the equipment			
	Manufacturer	Model		
	a. Are speakerphones/microphones enabled?		□ Yes	□ No
	■ If yes, has the remote room monitoring capability been disabled?		□ Yes	□ No
	■ Has this been approved for use by the AO?	□ Yes	□ No	□ N/A
	Provide detailed configuration procedures			

	■ If applicable, is the voice mail or unified messaging services configured to prevent unauthorized access from remote diagnostic ports or internal dial tone?	□ Yes	□ No
4.	**Are any multi-function office machines (M-FOMs) used within the SCIF (M-FOMs are electronic equipment that can be used at network or standalone printers, facsimiles, and copiers)?**	□ Yes	□ No
	a. If yes, please identify the device to include (Please identify all M-FOM devices in use, either below or as an attachment) – Include a manufacture Volatile statement for each M-FOM.		

	Make	Model	Serial Number

	b. If yes, please identify all features and information processing level of each M-FOM			
	1) Copier?	□ Yes	□ No	□ N/A
	■ If yes, level(s) of information			
	2) Facsimile?	□ Yes	□ No	□ N/A
	■ If yes, level(s) of information			
	3) Printer? (connected to a standalone computer or network)	□ Yes	□ No	□ N/A
	■ If yes, please explain and identify the system(s) and the level(s) of information			
	c. Does the M-FOM have memory storage capability?	□ Yes	□ No	□ N/A

	If yes, what kind?	□ Volatile (information in memory clears/erases when powered off)	□ Non-volatile (information in memory that remains when powered off)

	d. Does the M-FOM have a digital hard drive?	□ Yes	□ No	□ N/A
	e. Have maintenance and disposition procedures been established?	□ Yes	□ No	□ N/A
	f. Does the M-FOM have voice transmission capability and/or a telephone handset?	□ Yes	□ No	□ N/A
	■ If yes, how is this feature protected? Please describe			
5.	**Are there any video teleconference (VTC) systems installed?**	□ Yes	□ No	
	■ If yes, what level(s) of information is the VTC system processing?			

	Which room(s) contain VTC systems?		
6.	**Are there any commercial television receivers installed?**	□ Yes	□ No
	■ If yes, provide a separate annotated floor plan of the commercial television system		
7.	**Does the SCIF have any automated environmental infrastructure systems?**	□ Yes	□ No
	■ If yes, describe what countermeasures have been taken to provide against malicious activity, intrusion, and exploitation. (Example: premise management systems, environmental control systems, lighting and power control units, uninterrupted power sources)		
8.	**REMARKS:**		
Section G: Acoustical Protection			
1.	**Do all areas of the SCIF meet AO required acoustical protection standards"? (Ref: Chapter 9A)**	□ Yes	□ No
	■ If no, describe additional measures taken to provide conforming acoustical protection (e.g., added sound insulation, door and windows coverings, no discussion areas, sound masking, etc.)		
2.	**Are there any amplified audio systems used for classified information? (Example VTC, PA systems, etc.)**	□ Yes	□ No
	■ If yes, are the walls/ceilings/floor of the room where the amplified audio system resides acoustically treated to meet a Sound Group 4 or STC 50?	□ Yes □ No	□ N/A
3.	**Is there a public address or music system entirely contained within the SCIF?**	□ Yes	□ No
	■ If yes, provide a separate annotated floor plan for each system		
4.	**Is the SCIF equipped with a public address, emergency/fire announcement or music system originating outside the SCIF?**	□ Yes	□ No
Section H: Classified Destruction Methods			
1.	**Destruction methods? (Ref: Chapter 12M)**		
	a. Describe the method and equipment used for destruction of classified/sensitive material (if more than one method or device, use Remarks to describe). List all manufacturer and models		
	Method	Device Manufacturer	Model

	b. Is a secondary method of destruction available?		☐ Yes	☐ No
	c. Describe the location of destruction site(s) in relation to the secure facility			
	d. Describe method or procedure used for handling non-soluble classified/sensitive material at this facility			
	e. Do you have a written Emergency Action Plan (EAP) approved by AO (if required)?	☐ Yes	☐ No	☐ N/A
2.	**REMARKS:**			
Section I: INFOSEC/TEMPEST/Technical Security				
1.	**Does the facility electronically process classified information? (Ref: Chapter 13)**		☐ Yes	☐ No
	■ If yes, complete TEMPEST CHECKLIST FOR SCIF Form			

This page intentionally left blank.

CLASSIFY ACCORDING TO FACILITY SPONSOR CLASSIFICATION GUIDANCE

TEMPEST Checklist

[Insert Org Name]

[Date]

[Address]

TEMPEST CHECKLIST

(Classified when filled in)

DATE: _____

(Select the appropriate block)

SECTION A - SCIF Identification Data

1. SCIF Data:

Organization/Company Name:_____

Organization subordinate to: _____

Office E-mail address: _____(C) _____ (U)

2. SCIF Location:

Street Address:_____

Bldg. Name/Number: _____Floor(s): _____

Room No(s).:_____

City: _____State/Country:_____ Zip Code:_____

Military Base/Installation Name:

GPS Coordinates: _____

3. Primary SCIF Point(s) of Contact:

Name(s):_____

DSN/Commercial Telephone:_____

Secure Telephone:_____

Secure Fax No:_____

Unclassified Fax No:_____

Secure E-mail Address:_____

Unclassified E-mail Address:_____

4. Alternate SCIF Point(s) of Contact:

Name(s):_____

DSN/Commercial Telephone:_____

Secure Telephone:_____

Secure Fax No:_____

Unclassified Fax No:_____

Secure E-mail Address:_____

Unclassified E-mail Address:_____

SECTION B - SCIF Equipment/Systems

Inspectable Space – The three-dimensional space surrounding equipment that process classified and/or sensitive information within which TEMPEST exploitation is not considered practical or where legal authority to identify and remove a potential TEMPEST exploitation exists and is exercised. The CTTA shall determine the inspectable space for a facility.

1. Signal Lines and Signal Distribution Systems:

a. Are there any Signal Lines/Signal Distribution systems that exit the SCIF's Inspectable Space?

{ } Yes { } No (skip to 2)

b. If Yes, what type of lines exit the Inspectable Space of the SCIF? If yes, give a diagram identifying the location and line types. Clearly identify any usage of a Protected Distribution System.

{ } Fiber Optic *(Skip to 2.)* *{ }* Coaxial *{ }*Copper Wires

c. If they are Coaxial or Copper wires, is there any kind of Filter or Isolation device installed on them?

{ } YES *{ }* NO *(Skip to e.)*

d. If Yes, what type of device is used in the system? *If needed, use additional sheets.*

Make _____ Model # _____ Location _____

Make _____ Model # _____ Location _____

Make _____ Model # _____ Location _____

e. If No, describe each Signal Lines/Signal Distribution Systems. Detail where it goes, what it connects to outside the SCIF, the composition of line, the number of lines, etc. *If needed, use additional sheets.*

_____

_____

Submit floor plans of the SCIF that show the location, routing and identity of all signal lines and signal distribution systems within the SCIF. Identify them as Black. Red or Red-SCI and include all telephone lines, signal lines, alarm lines, etc. If applicable, indicate where they leave the SCIF area and show the locations of all filters, Isolators and amplifiers

2. Power Lines and Power Distribution Systems:

a. Are there any Power Lines/Power Distribution Systems that exit the SCIF?

{ } YES { } NO *(Skip to 3.)* *If yes, provide a diagram showing where it exits the SCIF.*

b. Describe each Power Lines/Power Distribution Systems. Detail where it leaves the SCIF, what it connects to outside the SCIF, does the power come from a Host Nation source, does the power come from a US controlled generator, describe the material composition of the line, the number of lines, voltages involved, etc. *If needed, use additional sheets.*

_____

_____

Submit floor plans of the SCIF showing the location, routing and identity of all power lines and power distribution systems within the SCIF. Identify them as Black, Red or Red-SCI. If applicable, indicate where they leave the SCIF area and show the locations of all filters, Isolators and amplifiers.

3. Heating, Ventilation and Air Conditioning (HVAC) Systems; Water Pipes; Gas Pipes, Sprinkler Systems, etc.:

a. Describe each HVAC Systems or pipe. Please explain in detail: path, connections in/outside of the SCIF, composition of the vent or pipe, size, accessibility, etc. Provide a diagram

indicating their exits from the SCIF. If there are any grounding mitigations, please indicate on the diagram. Are wave guides installed? *If needed, use additional sheets.*

_____

_____

Submit floor plans of the SCIF showing the location, routing and identity of all HVAC systems and pipes within the SCIF. If applicable, indicate where they leave the SCI area and show the locations of all Isolators and non-conductive breaks.

4. Radio Transmission/Reception Device:

a. Are there any Radio Transmitters or Receivers located in the SCIF or within three meters of the SCIF's perimeter wall? (to include cell phones, Bluetooth, etc.,)

{ } YES *(Go to Device #1.)* *{ }* NO *(Skip to 5.)*

Device #1:

a. Type of equipment Make Model number

_____ _____ _____

b. List how many hours the equipment is used? Hours per: day____ week____ month_____

c. Prior to encryption, what is the highest classification level of the information transmitted?

{ } SCI { } TOP SECRET { } SECRET { } CONFIDENTIAL { } UNCLASSIFIED

d. List the room number(s) where the equipment is located: _____

e. List the distance between the radio transmission/reception device and the nearest RED equipment or crypto gear _____

f. Is the power for the radio transmission/reception equipment isolated from the power for the RED processing equipment?

{ } YES { } NO *(Skip to h.)*

g. If Yes, how are they isolated?

{ } Separate power circuit *(Skip to 5.)* *{ }* Power line filters *(Should be annotated in 2d.)*

h. If No, describe each transmitter power source. Please explain in detail: path, connections in/outside of the SCIF, composition of the line, voltage, size/gauge, accessibility, etc. *If needed, use additional sheets.*

_____

_____

For Additional Devices *(use additional sheets)*

Submit floor plans of the SCIF showing the transmitter locations, signal and power line routing and the identity of all system components installed within the SCIF. If applicable, indicate where they leave the SCI area, where the antenna is and show the locations of all Isolators and filters.

5. Multilevel Systems:

a. Are there any multi-level systems (e,g, equipment that processes different classification levels) located in the SCIF or within one meter of the SCIF's perimeter wall?

{ } YES { } NO *(Skip to 6) If so, describe the level in detail.*

_____

_____

_____

6. Telecommunications Systems:

a. What kind of telecommunications systems are in the SCIF? (VoIP, DSM) Please describe.

_____

_____

7. Existing TEMPEST Countermeasures:

a. List any existing TEMPEST countermeasures such as shielded enclosures, supplemental shielding, filters (power, signal, telephone, etc...), and non-conductive sections in metallic distribution systems (pipes, a/c ducts, etc...).

_____

_____

b. Describe construction method and materials used in:

Perimeter wall:

_____

_____

Floor:

_____

_____

Ceiling:

_____

_____

c. Does the SCIF perimeter have windows?

{ } YES *(Answer below.)* { } NO *(Go to SECTION C.)*

List quantity, size, and any countermeasures used and pertinent information about your windows.

_____

_____

SECTION C - Information Processing

Volume of Information Processed- Describe the percentage and volume of information processed at the UNCLASSIFIED, SENSITIVE, CONFIDENTIAL, SECRET, and TOP SECRET levels.

_____

_____

_____

_____

SECTION D - Maps/Diagrams

Submit these drawings even if you submitted them with your FFC for physical security accreditation. The FFC is routed to different sections and are considered separate actions. Soft copies are preferred and while most formats are acceptable, Power Point is recommended.

1. External: (Please indicate on all external maps a compass heading that displays North at a minimum.)

a. Submit scale drawings or maps of the location of your SCIF's building within the base/post/compound/city in which it is located.

b. If you are on a military base/post, a government controlled facility/area or a compound/campus that is solely controlled by your company with a 24 hour guard force, indicate the distance between the building and the closest boundary of the compound in meters. Also indicate the distance in meters to the boundaries in each cardinal direction (i.e. East, West, North and South). Submit scale drawings or maps of the location of the post/base/facility/area/campus/compound in relationship to the nearest city.

c. If you are not in a controlled area, show on the map/drawings the distances in meters from the SCIF perimeter to the closest limit of SCIF's inspect able space boundary (those areas where the U.S. government or your company does not have the legal authority to identify and/or remove a TEMPEST exploitation or where it would be impractical to conduct a TEMPEST attack).

d. Show the locations of any areas within 100 meters of the SCIF which are occupied by Foreign Nationals or controlled by Foreign Entitles/Companies that are not readily accessible by SCIF personnel identify the occupants and their distance in meters from the SCIF perimeter.

2. Internal:

Submit scale drawings or maps of the location of your SCIF within the building or facility that it resides. Provide floor plans of the SCIF itself and provide the following:

a. Location and identify by manufacture, model, type, and level of classification of any equipment that is electronically processes unencrypted National Security Information (NSI). For large facilities, this list can be placed on a separate spread sheet and numbers/symbols can be used in the drawing.

b. Location of all Signal Line Distribution Systems, telephone instruments, line and power filters and/or isolators, signal ground points, etc...

c. Routing and identity of lines, cables and other metallic conductors which leave the SCI area, including telephone, power, signal, alarm lines, pipes, air ducts, etc...

d. If the SCIF is located in a Multi-story building NOT entirely controlled by the US government, submit a floor plan of the entire floor and identify the occupants of the other spaces. In addition, provide the names of the occupants on the floors above and below and, if possible, identify any foreign nationals. GSA facilities are not exempt from the above requirement.

e. Indicate whether the SCIF shares a common wall with any non-government organizations. If so, list them and show their locations on the diagram and maps.

This page intentionally left blank.

CLASSIFY ACCORDING TO FACILITY SPONSOR CLASSIFICATION GUIDANCE

Compartmented Area Checklist

[Insert Org Name]

[Date]

[Address]

CHECK Applicable blocks		
☐ Initial Accreditation	☐ Re- Accreditation	☐ Modified Facility
☐ Pre-construction	☐ New Facility	☐ Page Change

Checklist Contents

Section A: **General information**

Section B: **Compartmented Area Security**

Section C: **Doors**

Section D: **Intrusion Detection Systems (IDS)**

List of Attachments

(Diagrams must be submitted on 8 ½″ x 11″ or 11″ x 17″ format)

Section A: General Information						
1.	**SCIF Data**					
	Organization/Company Name					
	SCIF Identification Number *(if applicable)*					
	Organization subordinate to *(if applicable)*					
	Cognizant Security Authority (CSA)					
	Defense Special Security Communication System Information ***(if applicable)***					
	DSSCS Message Address					
	DSSCS INFO Address					
	If no DSSCS Message Address, please provide passing instructions					
2.	**Compartmented Area Location**					
	Street Address					
	Building Name/#		Floor(s)			
	Suite(s)		Room(s) #			
	City		Base/Post			
	State/Country		Zip Code			
	Contract number and expiration date *(if applicable*	**Contract Number:**		**Expiration Date:**		
	Concept approval date:		by:			
3.	**Mailing Address (if different from SCIF location)**					
	Street or Post Office Box					
	City		State		Zip Code	
4.	**E-Mail Address**					
	Classified		(Network/System Name & Level)			
	Unclassified		(Network/System Name)			
	Other		(Network/System Name)			
5.	**Responsible Security Personnel**					
		PRIMARY		**ALTERNATE**		
	Name					
	Commercial Telephone					

	DSN Telephone		
	Secure Telephone		
	STE Telephone		
	Other Telephone		
	Home Telephone		
	Facsimile	Classified:	Unclassified:
	Command or Regional Special Security Office/name (SSO): *(if applicable)*		
	Commercial Telephone		
	Other Telephone		
	Information System Security Officer		
	Commercial Telephone		
	Secure Telephone		

6.	**Accreditation Data**				
	a. Compartmented area accreditation level desired: 1) Indicate storage requirement:				
	☐ Open	☐ Closed	☐ Continuous Operation	☐	☐ None
	2) Indicate the facility type				
	☐ Permanent	☐ Secure Working Area	☐ Temporary Secure Working Area	☐ Tactical	
	b. Existing SCIF/SAPF Accreditation Information ***(if applicable)***				
	1) Level general (TS SAP; SCI, etc.):				
	2) Accreditation granted by:			on:	

	c. If automated information system (AIS) is used, has an accreditation been granted?			☐ Yes	☐ No
	If yes, identify compartment classification level (check all that apply)				
	☐ SCI	☐ Top Secret	☐ Secret	☐ Confidential	
	d. SCIF duty hours: _____ (hours to hours), _____ days per week.				
	e. Total square footage that the SCIF occupies:				
	f. Has CSA requested any waivers?	☐ Yes	☐ No	☐ N/A	If yes, attach a copy of approved waiver

Section B: Compartmented Area Security					
1.	**How is access to the compartmented area controlled?**				
	By Guard Force	☐ Yes	☐ No	Security clearance level:	
	By assigned personnel	☐ Yes	☐ No		
	By access control device	☐ Yes	☐ No	If yes, please provide manufacturer and model	
	MANUFACTURER			**MODEL**	
	Does the compartmented area have windows?			☐ Yes	☐ No
	How are they acoustically protected? *(if applicable)*				
	How are they secured against opening?				
	How are they protected against visual surveillance *(if applicable)*				
	Do ventilation ducts penetrate the compartmented area perimeter?			☐ Yes	☐ No
	Number and size (indicate on floor plan)				
	Are they provided acoustical protection?			☐ Yes	☐ No
	Construction:				
	Perimeter Walls:				
	Material and thickness:				
	Do the walls meet ICS 705-1 Wall construction for closed storage requirements?			☐ Yes	☐ No
	True ceiling (material and thickness)				

	False ceiling	☐ Yes	☐ No
	Type of ceiling material:		
	Distance between false and true ceiling:		
	False Floor?	☐ Yes	☐ No
	Distance between false and true floor:		
	REMARKS:		

Section C: Doors			
1.	**Describe compartmented area primary entrance door (indicate on floor plan)**		
	a. Is an automated door closer installed?	☐ Yes	☐ No
2.	**Describe number and type of doors used for compartmented area emergency exits and other perimeter doors (indicate on the floor plan)**		
	a. Is an automated door closer installed?	☐ Yes	☐ No
3.	**Describe access controls on the doors**		
	MANUFACTURER	**MODEL**	
	a. Locking devices: (if overseas and required by PSO?)		
	Perimeter compartmented area entrance door		
	MANUFACTURER	**MODEL**	**GROUP RATING**
	b. Does entrance door stand open into an uncontrolled area?	☐ Yes	☐ No
	If yes, describe tamper protection:		
	c. Emergency exists and other perimeter doors: Describe (locks, metal strip/bar, deadbolts and panic hardware:		
	d. Where are the door lock combinations filed?		

Section D: Intrusion Detection Systems *(If overseas and required by PSO)*				
1.	**Method of interior motion detection protection:**			
	a. Accessible perimeter?			
	b. Storage area?			
	c. Motion detection sensors (indicate on floor plan):			
	Tamper Protection	☐ Yes	☐ No	Other (e.g., CCTV, etc.)
2.	Door and window protection (Indicate on floor plan:			
	a. Level 1 or 2 High Security Switch on door?		☐ Yes	☐ No
	b. If SCIF has ground floor windows, how are they protected?			
	c. Other: (CCTV, etc.)			
3.	**Method of ventilation and ductwork protection:**			
4.	**Space above false if ceiling** (only outside the United States, required)			
	a. Motion detection sensors:			

This page intentionally left blank.

CLASSIFY ACCORDING TO FACILITY SPONSOR CLASSIFICATION GUIDANCE

Shipboard Checklist

[Insert Org Name]

[Date]

[Address]

CHECK Applicable blocks		
☐ Initial Accreditation	☐ Re- Accreditation	☐ Modified Facility
☐ Pre-construction	☐ New Facility	☐ Page Change

Checklist Contents

Section A: **General information**

Section B: **Physical Security**

Section C: **Intrusion Detection Systems (IDS)**

Section D: **Telecommunication Systems and Equipment Baseline**

Section E: **Classified Destruction Methods**

Section F: **TEMPEST/Technical Security**

List of Attachments

(Diagrams must be submitted on 8 ½″ x 11″ or 11″ x 17″ format)

Section A: General Information				
1.	**SCIF Data**			
	a. Organization/Company Name			
	b. Name of Ship and Hull number			
	c. Home Port			
	d. SCIF ID Number			
	e. Contract Number and Expiration Date *(if applicable)*			
	f. Concept Approval Date			
	g. Cognizant Security Authority (CSA)			
	Defense Special Security Communication System Information *(if applicable)*			
	h. DSSCS Message Address			
	DSSCS INFO Address			
	If no DSSCS Message Address, please provide passing instructions			
	i. Location of Compartments			
2.	**Complete Mailing Address**			
	Street Address			
	Building Name/#		Floor(s)	
	Suite(s)		Room(s) #	
	City		Base/Post	
	State/Country		Zip Code	
3.	**E-Mail Addresses**			
	Classified		(Network/System Name & Level)	
	Unclassified		(Network/System Name)	
	Other		(Network/System Name)	
	Additional Address		(Network/System Name)	
4.	**Responsible Security Personnel**			
		PRIMARY	ALTERNATE	
	Name			
	Commercial Telephone			
	DSN Telephone			

	Secure Telephone		
	/STE Telephone		
	Other Telephone		
	Home ***(optional)***		
	Facsimile Number:		
	Classified		Unclassified
	Command or Regional Special Security Office/Name (SSO) ***(if applicable)***		
		PRIMARY	**ALTERNATE**
	Commercial Telephone		
	Other Telephone		
	Information System Security Officer Name		
		PRIMARY	**ALTERNATE**
	Commercial Telephone		
	Secure Telephone		
5.	**Accreditation Data**		
	a. Category/Compartments of SCI Requested: 1) Indicate storage requirement:		
	☐ Open	☐ Closed	☐ Continuous Operation	☐ None
	2) Indicate the facility type		
	☐ Permanent	☐ Temporary Secure Working Area	☐ Secure Working Area	☐ Tactical
	b. Existing Accreditation Information ***(if applicable)***		
	1) SCIF accesses required		
	2) Accreditation granted by:	On:	
	3) Waivers:		
	4) Co-Use Agreements	☐ Yes	☐ No	If yes, provide sponsor/compartment:
	c. SAP(s) co-located	☐ Yes	☐ No	If yes, identify SAP Classification level (check

	within SCIF			all that apply)	
	☐ SCI	☐ Top Secret		☐ Secret	☐ Confidential
	d. SCIF duty hours	(hours to hours)			days per week
	e. Total square footage that the SCIF occupies				
	f. Has CSA requested any waivers?	☐ Yes	☐ No	☐ N/A	If yes, attach a copy of the approved waiver
6.	**Construction/Modification**				
	Is construction or modification complete?	☐ Yes	☐ No	☐ N/A	If no, enter the expected date of completion
7.	**Inspections**				
	a. TSCM Service completed by				On _____ *(Attach a copy of report)*
	b. Were deficiencies corrected?	☐ Yes	☐ No	☐ N/A	If no, explain
	c. Last physical security inspection by				On _____ *(Attach a copy of report)*
	Were deficiencies corrected?	☐ Yes	☐ No	☐ N/A	If no, explain
8.	**Remarks**				

	Section B: Physical Security			
1.	**Decks, bulkheads and overhead construction**			
	Are the decks, bulkheads and overhead constructed of aluminum plate or standards shipboard material true floor to ceiling?		☐ Yes	☐ No
2.	**Security In-Depth**			
	What external security attributes and/or features should the CSA consider before determining whether or not this facility has Security In-Depth? *Please identify/explain all factors:*			
3.	**Access Controls: How is access to the SCIF controlled?**			
	a. By Guard Force	☐ Yes	☐ No	If yes, what is their minimum security clearance level?
	b. Is Guard Force Armed?	☐ Yes		☐ No
	c. By assigned personnel	☐ Yes	☐ No	If yes, do personnel have visual control of SCIF entrance door?

	☐ Yes	☐ No		☐ N/A
	d. By access control device	☐ Yes	☐ No	If yes, what kind?
	☐ Automated access control system		☐ Non-automated	
	If non-automated			
	1. Is there a by-pass key	☐ Yes	☐ No	☐ N/A
	If yes, how is the by-pass key protected?			
	2. Manufacturer	Model		
	(Attach sheet if additional space is required for this information)			
	If automated			
	1. Are access control transmission lines protected by FIPS 140-2 encryption?			
	☐ Yes	☐ No	If no, explain the physical protection provided	
	2. Are automated access control system locations within a SCIF or an alarmed area controlled at the **SECRET** level?		☐ Yes	☐ No
	3. Is the access control system encoded and is ID data and PINs restricted to SCI-indoctrinated personnel?		☐ Yes	☐ No
	4. Does external access control outside SCIF have tamper protection?		☐ Yes	☐ No
	5. Is the access control device integrated with an IDS:	☐ Yes	☐ No	☐ N/A
	Is the access control device integrated with a network system?	☐ Yes	☐ No	☐ N/A
4.	**Primary Entrance Door**			
	a. Is routine ingress and egress to the space through one door?		☐ Yes	☐ No
	b. Is the shipboard type door constructed IAW ICS 705-1,?		☐ Yes	☐ No
	c. Is door constructed of aluminum/steel plate or standard shipboard materials?		☐ Yes	☐ No
	d. Is door equipped with a combination lock that meets requirements of a Pedestrian Deadbolt Federal Specifications FF-L-2890?		☐ Yes	☐ No
	Include lock manufacturer, model and group			
	Manufacturer	**Model**	**Group Rating**	
	e. Is door equipped with an access control device		☐ Yes	☐ No
	f. Is door constructed in a manner which will preclude unauthorized removal of hinge pins and anchor bolts, as well as obstruct access to lock-in bolts between door and frame?		☐ Yes	☐ No

	g. Remarks:		
5.	**Emergency Exit**		
	a. Is space equipped with an emergency exit?	☐ Yes	☐ No
	b. Has the emergency exit been fabricated of aluminum/steel plate or standard shipboard materials?	☐ Yes	☐ No
	c. Has door(s) been mounted in a frame braced and welded in place in a manner commensurate with structural characteristics of the bulkhead, deck or overhead in which it is located?	☐ Yes	☐ No
	d. Has the emergency exit been constructed in a manner which will preclude unauthorized removal of hinge pins and anchor bolts, as well as obstructs access to lock-in bolts between door and frame?	☐ Yes	☐ No
	e. Remarks		
6.	**Restrictions on Damage Control Fittings and Cable**		
	a. Are any essential damage control fittings or cables located within or pass through the SCIF?	☐ Yes	☐ No
	b. Remarks		
7.	**Removable Hatches and Deck Plates**		
	a. Are hatches and deck plates less than 10 square feet that are secured by exposed nuts and bolts (external to SCIF) secured with high security padlocks?	☐ Yes	☐ No
	b. If key padlocks are used, are the keys stored in a security container located with a space under appropriate security control?	☐ Yes	☐ No
	c. Remarks:		
8.	**Vent and Duct Barriers**		
	a. Are vents, ducts, louvers, or other physical perimeter barrier openings with a cross sectional dimension greater than 96 square inches protected at the perimeter with a fixed barrier or security grill?	☐ Yes	☐ No
	b. If gratings or bars are used, are they welded in place?	☐ Yes	☐ No
	c. Remarks:		
9.	**Acoustical Isolation**		
	a. Is the physical perimeter of the SCIF sealed or insulated with non-hardening caulking material so as to prevent inadvertent disclosure of SCI discussions or briefings from within the SCIF?	☐ Yes	☐ No
	b. In instances where the physical perimeter barrier is not sufficient to control voices or sounds, is the use of sound deadening material installed?	☐ Yes	☐ No
	c. Do air handling units have continuous duty blowers or provide an effective level of sound masking in each air path?	☐ Yes	☐ No
	d. Remarks:		

10.	**Visual Isolation**		
	a. Are doors or other openings in the physical perimeter barrier through which the interior may be viewed screened or curtailed?	☐ Yes	☐ No
	b. Remarks		
11.	**Passing Windows and Scuttles**		
	a. Have passing windows and scuttles been eliminated from the SCIF?	☐ Yes	☐ No
	b. Remarks:		
12.	**Secure Storage Equipment**		
	a. Is the SCIF equipped with a sufficient number of GSA approved security containers?	☐ Yes	☐ No
	b. Have they been welded in place or otherwise secured to a foundation for safety?	☐ Yes	☐ No
	c. Remarks:		

Section C: Intrusion Detection Systems (IDS)			
1.	**Are SCIF access door(s) and emergency exit(s) protected by a visual and audible alarm system:**	☐ Yes	☐ No
	a. Does alarm installation consist of sensors at each door and alerting indicators located within the SCIF?	☐ Yes	☐ No
	b. Does the emergency exit door(s) alarm have a different feature?	☐ Yes	☐ No
	c. Does the system have an alarm monitor station which is continuously manned by personnel capable of responding to or directing a response to an alarm violation of the SCIF when it is unmanned?	☐ Yes	☐ No
	d. Remarks:		

Section D: Telecommunication Systems and Equipment Baseline				
1.	**Is the facility declared a "No classified Discussion Area"?**		☐ Yes	☐ No
	If yes, then the audio protection questions within this section may be identified as N/A			
	If the facility is declared a No Classified Discussion Area, are warning notices posted prominently within the facility?	☐ Yes	☐ No	☐ N/A
2.	**Does the facility have any unclassified telephones that are connected to the commercial public switch telephone network (PSTN)?**		☐ Yes	☐ No
	What is the method of on-hook protection?			
	1) CNSS 5006 (TSG-6) approved telephone or instrument	☐ Yes	☐ No	☐ N/A
	(Please identify all telephone equipment/stations and/or instruments being used either below or as an			

	attachment)				
	Manufacturer	**Model Number**	**TSG Number** *(if applicable)*		
	2. CNSS 5006 approved disconnect device?		☐ Yes	☐ No	☐ N/A
	a) Line disconnect		☐ Yes	☐ No	☐ N/A
	b) Ringer protection		☐ Yes	☐ No	☐ N/A
	Manufacturer	**Model Number**	**TSG Number** *(if applicable)*		
	3) CNSS 5002 (TSG-2) configured computerized telephone system (CTS)?		☐ Yes	☐ No	☐ N/A
	a) If yes, please provide the following information about the CTS				
	Manufacturer	**Model**			
	b) If yes, please provide specific location of the CTS				
	c) How is the facility protecting the CTS physically controlled?				
	d) If yes, what is the clearance level (if any) of facility or area where the switch is located and how is area controlled?				
	e) Are all cables, signal lines and intermediate wiring frames between the SCIF telephones and the CTS physically protected within a physically controlled space?			☐ Yes	☐ No
	If no, please explain				
	f) Are all program media, such as tapes and/or disks, from the CTS afforded physical protection from unauthorized alterations?			☐ Yes	☐ No
	g) Is an up-to-date master copy of the CTS software program maintained for confirmation and/or reloading of the operating system?			☐ Yes	☐ No
	h) Does the CTS have the capability to force or hold a telephone station off-hook?			☐ Yes	☐ No
	i) Does the CTS use remote maintenance and diagnostic procedures or other remote access features?			☐ Yes	☐ No
	If yes, explain maintenance procedures				
	j) Do the CTS installers and programmers have security clearances?			☐ Yes	☐ No
	If yes, at what access level (minimum established by CSA)				
	If no, are escorts provided?			☐ Yes	☐ No

	4) Is it Voice over Internet Protocol (VoIP) phone system ?	☐ Yes	☐ No	☐ N/A
	a) If yes, please provide the following information about the IPS			
	Manufacturer	**Model**	**IPS Location**	
	b) Do all unclassified telephones within the facility have a hold, mute and/or push-to-talk [handset] capability, (for off-hook audio protection)?	☐ Yes	☐ No	☐ N/A
	If no, please explain			
	c) Is access to the facility housing the IPS physically controlled?		☐ Yes	☐ No
	d) If yes, what is the clearance level (if any) of facility or area where the switch is located at and how is the area controlled?			
	e) Are all cables, signal lines and intermediate wiring frames between the SCIF telephones and the IPS physically protected or contained within a physically controlled space?		☐ Yes	☐ No
	If no, please explain			
	f) Are all program media, such as tapes and/or disks, from the IPS afforded physical protection from unauthorized alterations?		☐ Yes	☐ No
	g) Is an up-to-date master copy of the IPS software program maintained for confirmation and/or reloading of the operating system?		☐ Yes	☐ No
	h) Does the IPS have the capability to force or hold a telephone station off-hook?		☐ Yes	☐ No
	i) Does the IPS use remote maintenance and diagnostic procedures or other remote access features?		☐ Yes	☐ No
	j) Do the IPS installers and programmers have security clearances?		☐ Yes	☐ No
	If yes, at what access level (minimum established by CSA?			
	If no, are escorts provided?		☐ Yes	☐ No
3.	**Automatic telephone call answering**			
	Are there any automatic call answering devices for the telephones in the SCIF?		☐ Yes	☐ No
	1) If yes, please identify the type			
	a. Voice mail/unified message service		☐ Yes	☐ No
	b. Standalone telephone answering device (TAD)		☐ Yes	☐ No

	2) Provide manufacturer and model number of the equipment			
	Manufacturer	**Model Number**		
	Are speakerphones/microphones enabled?	☐ Yes	☐ No	☐ N/A
	If yes, has the remote room monitoring capability been disabled?		☐ Yes	☐ No
	Has this been approved for use by the CSA?	☐ Yes	☐ No	☐ N/A
	Provide detailed configuration procedures			
	If applicable, is the voice mail or unified messaging services configured to prevent unauthorized access from remote diagnostic ports or internal dial tone?		☐ Yes	☐ No
4.	**Are any Multi-Function Office Machines (M-FOMs) used within the SCIF (M-FOMs are electronic equipment that can be used as network or standalone printers, facsimiles, and copiers)**		☐ Yes	☐ No
	a. If yes, please identify the device to include (Please identify all M-FOM devices in use, either below or as an attachment (include a manufacture Volatile statement for each M-FOM)			
	Make	**Model**	**Serial Number**	
	b. If yes, please identify all features and information processing level of each M-FOM			
	1) Copier	☐ Yes	☐ No	☐ N/A
	If yes, level(s) of information			
	2) Facsimile	☐ Yes	☐ No	☐ N/A
	If yes, level(s) of information			
	3) Printer (connected to a standalone computer or network	☐ Yes	☐ No	☐ N/A
	If yes, please explain and identify the system(s) and the level(s) of information)			
	c. Does the M-FOM have memory storage capability?		☐ Yes	☐ No
	If yes, what kind?	☐ Volatile (information in memory clears/erases when powered off?	☐ Non-volatile (information in memory that remains when powered off)	
	d. Does the M-FOM have a digital hard drive?	☐ Yes	☐ No	☐ N/A
	e. Have maintenance and disposition procedures been established?	☐ Yes	☐ No	☐ N/A
	f. If reproduction of classified/sensitive materials take place outside the SCIF, describe			

	equipment and security procedures used to reproduce documents			
	g. Does the M-FOM have voice transmission capability and/or a telephone handset?	☐ Yes	☐ No	☐ N/A
	If yes, how is this features protected? Please describe			
5.	**Are there any video teleconference (VTC) systems installed?**		☐ Yes	☐ No
	If yes, what level(s) of information is the VTC system processing?			
6.	**Are all telecommunications systems, devices, features, and software documented?** *(Attached telecommunication baseline)*		☐ Yes	☐ No
7.	**Sound Powered Telephones**			
	Have all sound powered telephones been eliminated from the SCIF?		☐ Yes	☐ No
	If no, answer the following questions			
	a. Are there sound powered or other telephone systems in the facility which cannot connect to locations outside the SCIF?	☐ Yes	☐ No	How Many?
	b. Are they installed and protected IAW ICS 705-1, Section E?		☐ Yes	☐ No
	Remarks			
8.	**General Announcing System**			
	Do general announcing system loudspeakers have an audio amplifier and are the output signal line installed within the SCIF?		☐ Yes	☐ No
	Remarks			
9.	**SCI Intercommunications Announcing Systems**			
	Do any intercommunication type announcing systems that process SCI pass through areas outside the SCIF?		☐ Yes	☐ No
	If yes, list type, manufacturer and model			
	Type	**Manufacturer**	**Model**	
	Remarks			
10.	**Commercial Interconnection Equipment**			
	Are any commercial intercommunications equipment installed within the SCIF?		☐ Yes	☐ No
	Remarks			
11.	**Pneumatic Tube Systems**			
	a. Are there any pneumatic tube systems installed in the SCIF?		☐ Yes	☐ No
	b. Are they installed IAWICS 705-1, Section E??		☐ Yes	☐ No

	c. Remarks

Section E: Classified Destruction Methods				
1.	**Destruction methods**			
	a. Describe the method and equipment used for destruction of classified/sensitive material (if more than one method or device, use Remarks to describe. (If more than one device, use remarks to list all manufacturer and model)			
	Method	**Device Manufacturer**	**Model**	
	b. Is a secondary method of destruction available?		☐ Yes	☐ No
	c. Describe the location of destruction site(s) in relation to the secure facility:			
	d. Describe method or procedure used for handling non-soluble classified/sensitive material at this facility:			
	e. Do you have a written Emergency Action Plan (EAP) approved by CSA (if required)?	☐ Yes	☐ No	☐ N/A
	Remarks			

Section F: TEMPEST/Technical Security				
1.	**Does the facility electronically process classified information?**		☐ Yes	☐ No
	If yes, what is the highest level of information processed?			
2.	**For the last TEMPEST Accreditation (if applicable), provide the following information**			
	Accreditation granted by:	On		
3.	**Has the CSA's Certified TEMPEST Technical Authority (CTTA) required any TEMPEST countermeasures?**	☐ Yes	☐ No	☐ N/A
	If yes, please identify the countermeasures that have been installed (i.e. non-conductive sections, Radio Frequency (RF) shielding, power/signal line filters, window film, etc.)			
4.	**Are there any other systems installed within or in close proximity to the SCIF that have RF capability (e.g., fire alarm, ground-to-air-radio, cellular tower, RF networks, etc)?**		☐ Yes	☐ No
	If yes, please explain			

This page intentionally left blank.

CLASSIFY ACCORDING TO FACILITY SPONSOR CLASSIFICATION GUIDANCE

Aircraft/UAV Checklist

[Insert Org Name]

[Date]

[Address]

CHECK Applicable blocks		
☐ Initial Accreditation	☐ Re- Accreditation	☐ Modified Facility
☐ Pre-construction	☐ New Facility	☐ Page Change

Checklist Contents

Section A: **General information**

Section B: **Physical Security**

Section C: **Intrusion Detection Systems (IDS)**

Section D: **Classified Destruction Methods**

Section E: **TEMPEST/Technical Security**

List of Attachments

(Diagrams must be submitted on 8 ½″ x 11″ or 11″ x 17″ format)

Section A: General Information				
1.	**SCIF Data**			
	a. Organization/Company Name			
	b. Type of Aircraft and Tail Number			
	c. Home Station			
	d. SCIF ID Number			
	e. Contract Number and Expiration Date *(if applicable)*			
	f. Concept Approval Date			
	g. Cognizant Security Authority (CSA)			
	h. Defense Special Security Communication System Information ***(if applicable)***			
	DSSCS Message Address			
	DSSCS INFO Address			
	If no DSSCS Message Address, please provide passing instructions			
2.	**Complete Mailing Address**			
3.	**E-Mail Address**			
	Classified		(Network/System Name & Level)	
	Unclassified		(Network/System Name)	
	Additional		(Network/System Name)	
4.	**Responsible Security Personnel**			
		PRIMARY	ALTERNATE	
	Name			
	Commercial Telephone			
	DSN Telephone			
	Secure Telephone			
	STE Telephone			
	Other Telephone			
	Home Telephone			

	(Optional)				
	FAX #	Classified		Unclassified	
	Command or Regional Special Security Office/Name (SSO): ***(if applicable)***				
	Commercial				
	Other Telephone				
		PRIMARY		ALTERNATE	
	Information System Security Officer Name:				
	Commercial				
	Secure				
5.	**Accreditation Data**				
	a. Category/Compartments of SCI Requested:				
	b. Existing Accreditation Information ***(if applicable)***				
	(1) Category/Compartments of SCI:				
	(2) Accreditation granted by:			On:	
	(3) Co-Use Agreements	☐ Yes	☐ No	If yes, provide sponsor/compartment:	
	c. Is there a SAP(s) co-located within the aircraft?			☐ Yes	☐ No
	SAP Classification Level *(check all that apply)*				
	☐ SCI	☐ Top Secret	☐ Secret	☐ Confidential	
	d. Has CSA requested any waivers?	☐ Yes	☐ No	☐ N/A	If yes, attach a copy of the approved waiver
	Construction/Modification				
	Is construction or modification complete?	☐ Yes	☐ No	☐ N/A	If no, enter the expected date of completion
6.	**Inspections**				
	a. Last physical security inspection performed by			On _____ *(Attach a copy of report)*	
	Were deficiencies corrected?	☐ Yes	☐ No	☐ N/A	If no, explain
	REMARKS:				

Section B: Physical Security				
1.	**Stationary Aircraft/UAV**			
	a. Is the aircraft located within a controlled area?	☐ Yes	☐ No	☐ N/A
	If no, explain:			
	b. When not performing a SCI mission is all SCI removed from the aircraft and stored in an accredited SCIF?	☐ Yes	☐ No	☐ N/A
	If yes, SCIF ID:	If no, explain how SCI is protected when the aircraft is unoccupied:		
2.	**Access Control:** How is access to the aircraft controlled?			
	a. By Guard Force	☐ Yes	☐ No	If yes, what is their security clearance level?
	b. Is Guard Force Armed?		☐ Yes	☐ No
	c. By Assigned Personnel:		☐ Yes	☐ No
	If Yes, do personnel have visual control of the entrance door?	☐ Yes	☐ No	☐ N/A
	d. When processing SCI, are all personnel aboard the aircraft cleared for all the SCI compartments that the aircraft is accredited for?		☐ Yes	☐ No
	If not, what are the procedures for segregating/protecting SCI compartments from unauthorized disclosure?			
3.	**Hatches and Doors Leading Inside the Aircraft:**			
	a. Are doors equipped with GSA approved locks?		☐ Yes	☐ No
	Manufacturer	**Model**	**Group**	
	b. Are tamper serialized seals used when aircraft is unoccupied?		☐ Yes	☐ No
	If yes, are seals installed and a log book maintained by SCI cleared personnel?		☐ Yes	☐ No
	c. Remarks			
4.	**Acoustical Isolation**			
	a. Is a physical perimeter established around the aircraft at a distance so as to prevent inadvertent disclosure of SCI discussions		☐ Yes	☐ No

	or briefings from within the aircraft		
	b. In instances where the physical perimeter barrier is not sufficient to control voices or sounds, are sound countermeasure devices or sound generating devices used?	☐ Yes	☐ No
	c. Remarks		
5.	**Visual Isolation**		
	a. Are doors or other openings in the aircraft through which the interior may be viewed screened or curtained?	☐ Yes	☐ Yes
	b. Remarks		
6.	**Procedures For Protecting SCI When The Aircraft Is Parked In Friendly/Unfriendly Territories**		

Section C: Intrusion Detection Systems (IDS)					
1.	**Is the aircraft equipped or located within a structure or area that has an IDS?**			☐ Yes	☐ No
	If yes, please provide the following:				
	a. IDS Company provider name *(if applicable)*				
	b. Premise Control Unit (PCU)				
	Manufacturer	**Model Number**	**Tamper Protection**	☐ Yes	☐ No
	c. Where is the PCU located?				
	d. Location of interior motion detection protection: Accessible points of entry/perimeter?			☐ Yes	☐ No
	e. Has the IDS Alarm Monitor Station been installed to Underwriters Laboratories certified standards?			☐ Yes	☐ No
	If yes, please provide certification number and expiration date of UL certification				
	Certification Number	**Expiration Date**			
	f. Has the IDS passed CSA or UL 2050 installation and acceptance tests?			☐ Yes	☐ No
	If yes, please attach a copy of certificate and skip to question 2 below. (Non-commercial proprietary system must answer all questions)				

	g. Motion Sensors (Indicate sensor placement on a legible floor plan; 8.5″ x 11″ or 11″ x 17″ paper				
	Manufacturer	**Model Number**	**Tamper Protection**	☐ Yes	☐ No
	h. Are motion sensors installed above the false ceiling?		☐ Yes	☐ No	☐ N/A
	i. Are motion sensors installed below the false floors?		☐ Yes	☐ No	☐ N/A
	j. Are there any other intrusion detection equipment sensors/detectors in use?			☐ Yes	☐ No
	If yes, please identify make, model, and manufacturer and function (indicate on floor plan)				
	Make	**Model**	**Manufacturer**	**Function**	
	k. Does the IDS extend beyond the SCIF perimeter?			☐ Yes	☐ No
	Can the status of PCU be changed from outside IDS protection?			☐ Yes	☐ No
	If yes, is an audit conducted daily?			☐ Yes	☐ No
	Has the IDS configuration been approved by the CSA?			☐ Yes	☐ No
	l. Do any intrusion detection equipment components have audio or video capabilities?			☐ Yes	☐ No
	If yes, please explain:				
	Has the CSA mitigated this capability?			☐ Yes	☐ No
	m. IDS Administrator SCI indoctrinated?			☐ Yes	☐ No
	n. External Transmission Line Security: What is the method of line security? Meets NIST; FIPS 140-2 Encryption?			☐ Yes	☐ No
	If yes, has the encryption been certified by National Institute of Standards and Technology (NIST) or another independent testing laboratory?			☐ Yes	☐ No
	If not NIST FIPS 140-2, is there an alternate?			☐ Yes	☐ No
	If yes, please explain:				
	Does the alternate line utilize any cellular or other Radio Frequency (RF) capability?			☐ Yes	☐ No
	If yes, provide manufacturer and model				
	Manufacturer		**Model**		

	o. Does any part of the IDS use a local or Wide Are Network?	☐ Yes	☐ No	☐ N/A
	(1) Is the Network Intrusion Detection Software (NIDS) administrator at least Top Secret (collateral) cleared?	☐ Yes	☐ No	☐ N/A
	(2) Is the host computer dedicated solely for security purposes?	☐ Yes	☐ No	☐ N/A
	(3) Is the host computer secured within an alarmed area controlled at the Secret or higher level?	☐ Yes	☐ No	☐ N/A
	(4) Is the host computer protected through firewalls or similar devices?	☐ Yes	☐ No	☐ N/A
	Are the firewalls/devices configured to only allow data transfers between IDS components?	☐ Yes	☐ No	☐ N/A
	(5) Is the password for the host computer unique for each user and at least 8 characters long?	☐ Yes	☐ No	☐ N/A
	(6) Is the password changed semi-annually?		☐ Yes	☐ No
	(7) Are remote security terminals protected the same of the host computer?	☐ Yes	☐ No	☐ N/A
	If no, please explain:			
	p. Was the IDS installed by U.S. citizens:	☐ Yes	☐ No	☐ N/A
	If no, please explain:			
	q. Is emergency power available for the IDS?	☐ Yes	☐ No	☐ N/A
	What type? Generator	☐ Yes	☐ No	If yes, how many hours? _____
	What type? Battery	☐ Yes	☐ No	If yes, how many hours? _____
	r. If applicable, describe the method of ventilation and duct work protection:			
	s. Where is the IDS Alarm Monitor Station located?			
	t. Does the Monitor Station have any remote capabilities (i.e., resetting alarms, issuing PINs, accessing/securing alarms, etc)?	☐ Yes	☐ No	☐ N/A
	If yes, please explain:			
	u. Does the IDS have any automatic features (i.e., timed auto-secure, auto-access capabilities)?	☐ Yes	☐ No	☐ N/A
	v. Does the PCU/keypad have dial out capabilities?		☐ Yes	☐ No

	w. IDS Response Personnel		
	(1) Who provides initial alarm response?		
	(2) Does the response force have a security clearance?	☐ Yes	☐ No
	If yes, what is the clearance level:		
	(3) Do you have a written agreement for external response force?	☐ Yes	☐ No
	(4) Emergency procedures documented?	☐ Yes	☐ No
	(5) Reserve security force available?	☐ Yes	☐ No
	(6) Response to an alarm condition _____ minutes		
	x. Are response procedures tested and records maintained?	☐ Yes	☐ No
	If no, please explain:		
	y. If required, has a Catastrophic Failure Plan been approved by the CSA?	☐ Yes	☐ No
	z. Does the IDS undergo semiannual testing?	☐ Yes	☐ No
	aa. Have IDS records been maintained:	☐ Yes	☐ No
	bb. Remarks		

Section D: Classified Destruction Methods				
1.	For home station, describe the method and equipment used for destruction of classified/sensitive material (if more than one method or device, use Remarks section to describe (if more than one, use Remarks section to list all manufacturer and model)			
	Method	**Device Manufacturer**	**Model**	
2.	Is a secondary method of destruction available		☐ Yes	☐ No
3.	Describe the location of destruction site(s) in relation to the aircraft?			
4.	Describe the method or procedure used for handling non-soluble classified/sensitive material at your facility?			
5.	Do you have a written Emergency Action Plan (EAP) approved by CSA?		☐ Yes	☐ No
6.	Describe procedures for in-flight emergency destruction:			
7.	Remarks			

Section E: TEMPEST/Technical Security				
1.	Does the aircraft electronically process classified information?		□ Yes	□ No
	If yes, what is the highest level of information processed?			
2.	Has it received TEMPEST accreditation?	□ Yes	□ No	□ N/A
	Date	Accreditation granted by:		

SCIF Co-Use Request and MOA

1. **To: Addressee Government CSA**:_____

2. **From: Requesting Government CSA:**

   Requesting Agency _____ Date: _____

   POC : Name:_____ Telephone: _____

3. **Facility where co-use is desired**

   Company/Department Name: _____

   Complete SCIF Address: _____

   _____

   _____

   SCIF ID: _____ SCIF Room Numbers: _____

   SCIF POC: Name: _____ Telephone: _____

4. **Classification:** (Provide classification level, SCI compartments, and storage requirements for Co-Use)

   Highest Classification: Confidential ☐ Secret ☐ Top Secret ☐

   SCI compartments: _____

   Storage requirements: ☐ open ☐ closed

   1. **Co-Use Select Type:**

      ☐ ***Information System (IS) Processing Not Requested***

      ☐ ***Information System is requested*:** (*Provide the name and Phone number of the* requesting *POC for IS coordination*.) _____

      ☐ Use a system that will *not be* connected to system(s) for which the agency with Cognizance for the SCIF is the accreditor or,

      ☐ Use *for period processing only* an existing

system for which the agency with cognizance for the SCIF is the accreditor

IS Coordination POC: _____

6. Duration:

A. Contractor Facility:

RFP Date (if applicable) _____

Expiration date of Contract _____(enter date or "Indefinite")

Contract Number _____

B. Government Facility:

Expiration Date of agreement _____(enter date or "Indefinite')

7. Type Effort: Intel Related ☐ Other ☐ (If other, describe) _____

8. Does this facility have waivers? No ☐ Yes ☐ (If yes, list waivers)

_____

_____

Comments/Justification:_____

_____

CONCUR: _____ _____

Name and Title Date

* **Notice:** Email or other exchange and receipt of this form, completed and concurred, constitutes a formal *Memorandum of Agreement* (MOA). Co-Use means two or more organizations sharing the same SCIF. All personnel involved with Co-Use/Joint Use SCIFs must be approved to ICD 704 standards.

FORM 05.01, VERSION 2.0 01MAR05

Construction Security Plan (CSP)

Definition: A plan outlining security protective measures that will be applied to each phase of the construction project. The requirements set forth in this plan provide the baseline for construction security activities and may be supplemented as required but may not be reduced without coordination and approval from the Accrediting Official (AO).

The contents below are suggested topics. The plan format and content shall be developed by the element accrediting official (AO) based upon the size, purpose and location of the SCIF.

---

a. **Site Security Manager:** (identify the SSM and contact information)

b. **Statement of Construction Project:** (provide a description of the proposed work)

c. **Existing SCIF ID** (if project is associated with currently accredited SCIF)

d. **Cognizant Security Authority/ Accrediting Official:** (element)

e. **Location of Work:** (address/location)

f. **Estimated Start Date:** (estimated date construction will begin)

g. **Estimated Completion Date: (**estimated date construction will end)

h. **Has a Risk Assessment Been Completed:** (if yes attach copy)

i. **Security in Depth (SID) Documentation**: (Document the layers of protection offered at the site, such as security fencing or walls, roving guards, marine security guards, CCTV coverage, and controlled and/or limited access buffers to facility)

j. **Adjacencies to Consider**: (include a description of adjacent facilities to include other classified agencies, activities, and presence of foreign nationals operating in adjacent spaces on all six sides of the proposed SCIF)

k. **Control of Construction Plans and Documents**: (Describe how construction plans and all related documents shall be handled and protected)

l. **Control of Operations if a Renovation Project (**describe barriers that will be installed to segregate construction workers from operational activities **)**

m. **Procurement, Shipping and Storage of Building/Finishing Material:** (If required by AO, describe security measures to ensure integrity of building materials and/or finishing materials.)

n. **Construction Workers** (Depending upon the standards required (within U.S., outside U.S., etc), for construction workers, provide information to verify worker status, clearances if required, and/or mitigations employed.)

o. **Site Security** (Identify plans to secure construction site, to include any proposed fences, guards, CSTs, escorts, etc.)

p. **Security Administration:** (list security documentation and retention requirements that shall be maintained by the SSM (i.e. visitor logs, names of construction workers, security incidents, etc.)